User Manual

Inverter vision one 1.1

In order to prevent improper operation before use, please carefully read this manual.

Contents

1. Notes on This Manual 1
    1.1 Scope of Validity 1
    1.2 Target Group 1
    1.3 Symbols Used 1
2. Safety 2
    2.1 Appropriate Usage 2
    2.2 PE Connection and Leakage Current 3
    2.3 Surge Protection Devices (SPDs) for PV Installation 4
3. Introduction 4
    3.1 Basic Features 4
    3.2 Dimensions 5
    3.3 Terminals of inverter 5
4. Technical Data 6
    4.1 PV Input 6
    4.2 Battery 6
    4.3 AC Output/Input 6
    4.4 EPS Output 7
    4.5 Efficiency, Protection, Power consumption and Standard 8
    4.6 General Data 8
5. Installation 10
    5.1 Check for Physical Damage 10
    5.2 Packing List 10
    5.3 Mounting 11
6. Electrical Connection 14
    6.1 PV Connection 14
    6.2 Battery Connection 16
    6.3 AC Connection 16
    6.4 Earth Connection 21
    6.5 Electrical Connection 22
    6.6 EPS Connection (Non-parallel State) 34
    6.7 System Connection Diagrams 36
7. Firmware Upgrading 37
8. Operation 38
    8.1 Control Panel 38
    8.2 Function Tree 39
9. Maintenance 40
    9.1 Alarm List 40
    9.2 Troubleshooting and Routine Maintenance 46
10. Decommissioning 47
    10.1 Dismantling the Inverter 47
    10.2 Packaging 47
    10.3 Storage and Transportation 47

1. Notes on This Manual

1.1 Scope of Validity

This manual describes the assembly, installation, commissioning, maintenance and troubleshooting of the following model(s) of products:

Inverter vision one 1.1 (7kW)	Inverter vision one 1.1 (8kW)
Inverter vision one 1.1 (9kW)	Inverter vision one 1.1 (9.9kW)
Inverter vision one 1.1 (10kW)	Inverter vision one 1.1 (10.5kW)

Note: Please keep this manual where it will be accessible at all times.

1.2 Target Group

This manual is for qualified electricians. The tasks described in this manual only can be performed by qualified electricians.

1.3 Symbols Used

The following types of safety instructions and general information appear in this document as described below:

	Danger! “Danger” indicates a hazardous situation which, if not avoided, will result in death or serious injury.
	Warning! “Warning” indicates a hazardous situation which, if not avoided, could result in death or serious injury.
	Caution! “Caution” indicates a hazardous situation which, if not avoided, could result in minor or moderate injury.
	Note! “Note” provides important tips and guidance.

This section explains the symbols shown on the inverter and on the type label:

Symbols	Explanation
	Symbol Explanation CE mark. The inverter complies with the requirements of the applicable CE guidelines.
	This mark indicates compound UK product safety certification requirements.
	Beware of hot surface. The inverter can become hot during operation. Avoid contact during operation.
	Danger of high voltages. Danger to life due to high voltages in the inverter!

	Danger. Risk of electric shock!
	Danger to life due to high voltage. There is residual voltage in the inverter which needs 5 min to discharge. Wait 5 min before you open the upper lid or the DC lid.
	Read the manual.
	Product should not be disposed as household waste.
	PE conductor terminal.

2. Safety

2.1 Appropriate Usage

Inverter vision one 1.1 series inverters are designed and tested in accordance with international safety requirements. However, certain safety precautions must be taken when installing and operating this inverter. The installer must read and follow all instructions, cautions and warnings in this installation manual.

- All operations including transport, installation, start-up and maintenance, must be carried out by qualified, trained personnel.
- The electrical installation & maintenance of the inverter shall be conducted by a licensed electrician and shall comply with local wiring rules and regulations.
- Before installation, check the unit to ensure it is free of any transport or handling damage, which could affect insulation integrity or safety clearances. Choose the installation location carefully and adhere to specified cooling requirements. Unauthorized removal of necessary protections, improper use, incorrect installation and operation may lead to serious safety and shock hazards or equipment damage.
- Before connecting the inverter to the power distribution grid, contact the local power distribution grid company to get appropriate approvals. This connection must be made only by qualified technical personnel.
- Do not install the equipment in adverse environmental conditions such as in close proximity to flammable or explosive substances; in a corrosive or desert environment; where there is exposure to extreme high or low temperatures; or where humidity is high.
- Do not use the equipment when the safety devices do not work or are disabled.
- Use personal protective equipment, including gloves and eye protection during the installation.
- Inform the manufacturer about non-standard installation conditions.
- Do not use the equipment if any operating anomalies are found. Avoid temporary repairs.
- All repairs should be carried out using only approved spare parts, which must be installed in accordance with their intended use and by a licensed contractor or authorized service representative.

- Liabilities arising from commercial components are delegated to their respective manufacturers.
- Any time the inverter has been disconnected from the public network, please be extremely cautious as some components can retain charge sufficient to create a shock hazard. Prior to touching any part of the inverter please ensure surfaces and equipment are under touch safe temperatures and voltage potentials before proceeding.

2.2 PE Connection and Leakage Current

PV System Residual Current Factors

- In every PV installation, several elements contribute to the current leakage to protective earth (PE). these elements can be divided into two main types.
- Capacitive discharge current - Discharge current is generated mainly by the parasitic capacitance of the PV modules to PE. The module type, the environmental conditions (rain, humidity) and even the distance of the modules from the roof can effect the discharge current. Other factors that may contribute to the parasitic capacitance are the inverter's internal capacitance to PE and external protection elements such as lighting protection.
- During operation, the DC bus is connected to the alternating current grid via the inverter. Thus, a portion of the alternating voltage amplitude arrives at the DC bus. The fluctuating voltage constantly changes the charge state of the parasitic PV capacitor (i.e capacitance to PE). This is associated with a displacement current, which is proportional to the capacitance and the applied voltage amplitude.
- Residual current - if there is a fault, such as defective insulation, where an energized cable comes into contact with a grounded person, an additional current flows, known as a residual current.

Residual Current Device (RCD)

- All inverters incorporate a certified internal RCD (Residual Current Device) to protect against possible electrocution in case of a malfunction of the PV array, cables or inverter (DC). The RCD in the inverter can detect leakage on the DC side. There are 2 trip thresholds for the RCD as required by the DIN VDE 0126-1-1 standard. A low threshold is used to protect against rapid changes in leakage typical of direct contact by people. A higher threshold is used for slowly rising leakage currents, to limit the current in grounding conductors for the safety. The default value for higher speed personal protection is 30mA, and 300mA per unit for lower speed fire safety.

Installation and Selection of an External RCD device

- An external RCD is required in some countries. The installer must check which type of RCD is required by the specific local electric codes. Installation of an RCD must always be conducted in accordance with local codes and standards. Unless a lower value is required by the specific local electric codes, we suggest an RCD value between 100mA and 300mA.
- In installations where the local electric code requires an RCD with a lower leakage setting, the discharge current might result in nuisance tripping of the external RCD. The following steps are recommended to avoid nuisance tripping of the external RCD:

1. Selecting the appropriate RCD is important for correct operation of the installation. An RCD with a rating of 30mA may actually trip at a leakage as 15mA (according to IEC 61008). High quality RCDs will typically trip at a value closer to their rating.
2. Configure the trip current of the inverter' internal RCD to a lower value than the trip current of the external RCD. The internal RCD will trip if the current is higher than the allowed current, but because the internal inverter RCD automatically resets when the residual currents are low it saves the manual reset.

2.3 Surge Protection Devices (SPDs) for PV Installation

WARNING!

Over-voltage protection with surge arresters should be provided when the PV power system is installed. The storage inverters are equipped with SPDs on the PV input side as standard, in order to meet the secondary lightning protection requirements.

3. Introduction

3.1 Basic Features

Inverter vision one 1.1 series are high-quality inverters which can convert solar energy to AC energy and store energy into battery. The inverter can be used to optimize self-consumption, store in the battery for future use or feed-in to public grid. Work mode depends on PV energy and user's preference.

• System advantages:

- Advanced DSP control technology.
- Utilizes the latest high-efficiency power component.
- Advanced anti-islanding solutions.
- IP65 protection level.
- Max. Efficiency up to 97.8%. EU efficiency up to 97.4%. THD<3%.
- Safety & Reliability: Transformerless design with software and hardware protection.
- Export limitation (CT/Meter/DRM0/ESTOP).
- Power factor regulation. Friendly HMI.
- LED status indications.
- LCD display technical data, human-machine interaction through four touch keys.
- PC remote control.

• Work modes:

Work modes	Description
Self-use (with PV Power)	Priority: load>battery>grid The energy produced by the PV system is used to optimize self-consumption. The excess energy is used to charge the batteries, then exported to grid.
Self-use(without PV Power)	When no PV supplied, battery will discharge for local loads firstly, and grid will supply power when the battery capacity is not enough.
Feed in priority	Priority: load>grid>battery In the case of the external generator, the power generated will be used to supply the local loads firstly, then export to the public grid. The redundant power will charge the battery.
EPS mode	When the grid is off, system will supply emergency power from PV or battery to supply the home loads (Battery is necessary in EPS mode).

Note: Charging time is when the battery is charged within the set time range. The setting of charging time can be used in the above three modes.

3.2 Dimensions

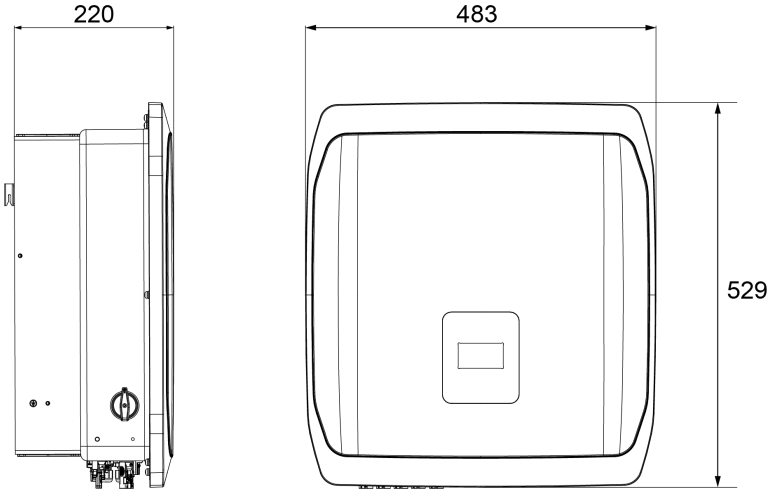

3.3 Terminals of inverter

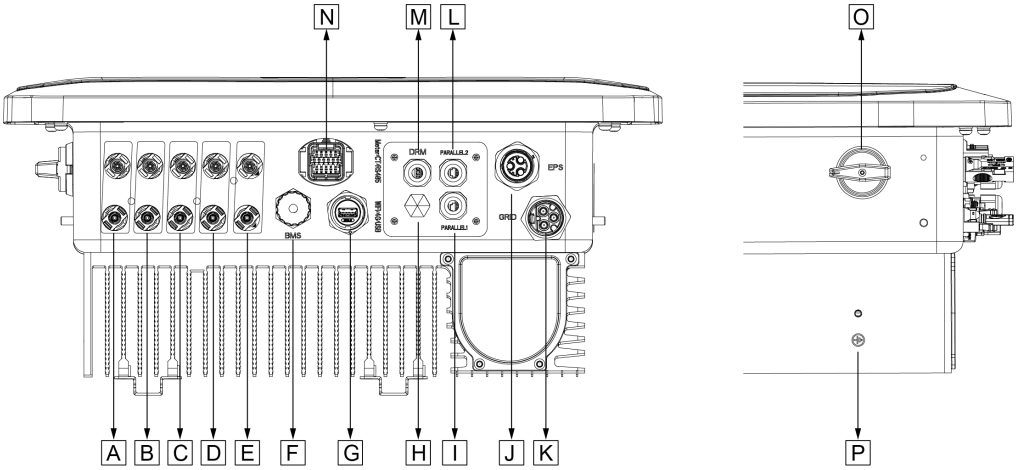

Item	Description	Item	Description
A	PV1	I	PARALLEL 1
B	PV2	J	EPS
C	PV3	K	GRID
D	PV4 (For 9-10.5kW Only)	L	PARALLEL 2
E	Battery Connector	M	DRM
F	BMS	N	Meter/CT/RS485
G	WiFi / 4G /USB	O	DC Switch
H	Waterproof Lock Valve	P	Grounding Screw

Note: Only authorized personnel are permitted to set the connection.

4. Technical Data

4.1 PV Input

Model	Inverter vision one 1.1 (7kW)	Inverter vision one 1.1 (8kW)	Inverter vision one 1.1 (9kW)	Inverter vision one 1.1 (9.9kW)	Inverter vision one 1.1 (10kW)	Inverter vision one 1.1 (10.5kW)
PV						
Max. PV array power [Wp]	15000	16000	18000	20000	20000	21000
Max. DC input power [W]	10500	12000	13500	15000	15000	15000
Max.MPPT input power(Per MPPT)	8000	8000	8000	8000	8000	8000
Max. DC voltage [V]	600					
Nominal DC operating voltage [V]	360					
Max. input current [A]	16/16/16		16/16/16/16			
Max. short circuit current [A]	20/20/20		20/20/20/20			
MPPT voltage range [V]	80-500	80-500	80-500	80-500	80-500	80-500
Start-up voltage [V]	75	75	75	75	75	75
No. of MPP trackers	3	3	4	4	4	4
Strings per MPP tracker	1	1	1	1	1	1
Max. inverter backfeed current to the array	0					
DC disconnection switch	Optional					

4.2 Battery

Battery	Inverter vision one 1.1 (7kW)	Inverter vision one 1.1 (8kW)	Inverter vision one 1.1 (9kW)	Inverter vision one 1.1 (9.9kW)	Inverter vision one 1.1 (10kW)	Inverter vision one 1.1 (10.5kW)
Battery Type	Li-Ion					
Battery voltage range [V]	85-480					
Recommended battery voltage [V]	300VDC					
Max. charge current [A]	50					
Max. discharge current [A]	50					
Communication interfaces	CAN/RS485					
Reverse connect protection	YES					

4.3 AC Output/Input

Model	Inverter vision one 1.1 (7kW)	Inverter vision one 1.1 (8kW)	Inverter vision one 1.1 (9kW)	Inverter vision one 1.1 (9.9kW)	Inverter vision one 1.1 (10kW)	Inverter vision one 1.1 (10.5kW)
AC OUTPUT						
Nominal AC power [VA]	7000	8000	9000	9900	10000	10500
Max. apparent AC power [VA]	7700	8800	9900	9900	10500	10500
Rated grid voltage (AC voltage range) [V]	220/230/240 (180 to 270)					
Rated grid frequency [Hz]	50 / 60, ±5					
Nominal AC current [A]	30.4	34.8	39.1	43.0	43.5	45.7
Max. AC current [A]	33.5	38.3	43.0	43.0	45.7	45.7
Inrush current [A]	9.6A@50us					
Max. output fault current [A]	130A@10us					
Max. output over-current protection [A]	91.4					
Displacement power factor	0.8 leading to 0.8 lagging					
Total harmonic distortion(THDi, rated power)	<3%					
AC INPUT						
Max. AC current [A]	60.9	69.6*1	78.3*1	78.3*1	78.3*1	78.3*1
Max. AC power [VA]	14000	16000*2	18000*2	18000*2	18000*2	18000*2
Rated grid voltage (AC voltage range) [V]	220/230/240 (180 to 270)					
Rated grid frequency [Hz]	50 / 60, ±5					

For Australian market (except 7kW), *1 is 63 A a.c. and *2 is 14500 VA.

4.4 EPS Output

Model	Inverter vision one 1.1 (7kW)	Inverter vision one 1.1 (8kW)	Inverter vision one 1.1 (9kW)	Inverter vision one 1.1 (9.9kW)	Inverter vision one 1.1 (10kW)	Inverter vision one 1.1 (10.5kW)
EPS OUTPUT (WITH BATTERY)						
Max. EPS Power [VA]	7000	8000	9000	9900	10000	10500
Nominal voltage[V]	220/230/240					
Nominal frequency[Hz]	50/60					
Max. EPS current [A]	31.8	36.4	40.9	45.0	45.5	47.7
EPS peak power [W]	10000, 60s		12000, 60s			
Switch time [s]	<20ms					
Total harmonic distortion (THDv, linear Load)	<2%					

4.5 Efficiency, Protection, Power consumption and Standard

Model	Inverter vision one 1.1 (7kW)	Inverter vision one 1.1 (8kW)	Inverter vision one 1.1 (9kW)	Inverter vision one 1.1 (9.9kW)	Inverter vision one 1.1 (10kW)	Inverter vision one 1.1 (10.5kW)
EFFICIENCY						
MPPT efficiency	99.90%	99.90%	99.90%	99.90%	99.90%	99.90%
Euro-efficiency	97.40%	97.40%	97.40%	97.40%	97.40%	97.40%
Max. Efficiency	97.80%	97.80%	97.80%	97.80%	97.80%	97.80%
Max. Battery charge efficiency(PV to BAT)(@full load)	98.50%	98.50%	98.50%	98.50%	98.50%	98.50%
Max. Battery charge/discharge efficiency (BAT to AC)(@full load)	97.00%	97.00%	97.00%	97.00%	97.00%	97.00%
PROTECTION						
PV reverse polarity protection	YES					
Battery reverse protection	YES					
Anti-islanding protection	YES					
Output short protection	YES					
Leakage current protection	YES					
Insulation Resistor Detection	YES					
Over-current protection /Over-temperature protection	YES					
Over voltage category	III(AC side),II(DC side)					
AC/DC surge protection	Type II/Type II					
AFCI protection	optional					
POWER CONSUMPATION						
Standby consumption [W] (Idle)	<15					
STANDARD						
Safety	IEC62109-1 / IEC62109-2					
EMC	EN 61000-6-1 / EN 61000-6-2 / EN 61000-6-3					
Certification	G99 / AS4777.2 / EN50549-1 / CEI 0-21 / NRS 097-2-1 and so on					

4.6 General Data

DIMENSION AND WEIGHT	
Dimensions (W*H*D) [mm]	483*529*220
Weight [kg]	29.5
Cooling principle	Natural
Inverter topology	Non-isolated
Communication interface	Meter (optional), WIFI,4G (optional), DRM, USB,CT,RS485
LCD display	Backlight 16*4 character
ENVIRONMENT LIMIT	
Ingress protection	IP65
Operating temperature range [°C]	-25…... +60°C (derating at +45°C)
Humidity [%]	0-95 (non-condensing)
Altitude [m]	<2000
Protective class	Class I
Storage temperature [°C]	-40…… +70
Noise emission (typical)[dB]	<30

5. Installation

5.1 Check for Physical Damage

Make sure the inverter is intact during transportation. If there is any visible damage, such as cracks, please contact your dealer immediately.

5.2 Packing List

Open the package and take out the product, please check the accessories first. The packing list shown as below.

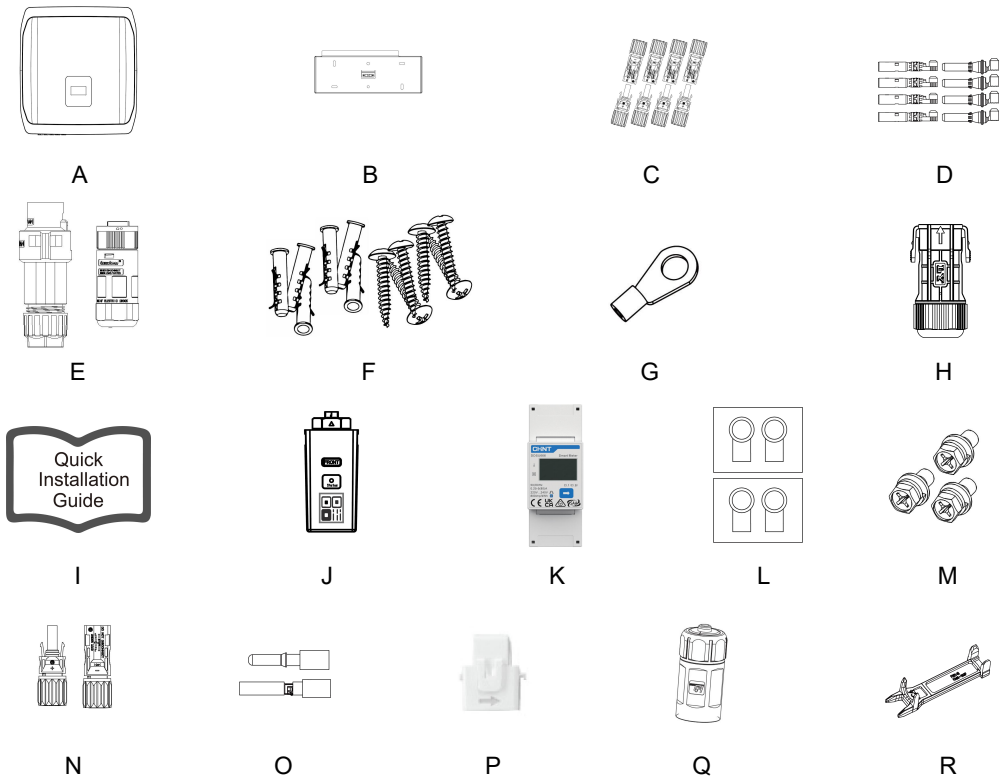

Object	Quantity	Description	Object	Quantity	Description
A	1	Inverter	J	1	WiFi/LAN/4G (Optional)
B	1	Bracket	K	1	Meter (Optional)
C	6/8	PV connectors	L	2	CT extension connector
D	6/8	PV pin contacts	M	3	Hexagonal screws
E	2	AC connectors (1*EPS, 1*GRID)	N	2	Battery connectors (optional) (1*positive, 1*negative)
F	6	Expansion tubes & Expansion screws	O	2	Battery pin contacts (optional) (1*positive, 1*negative)
G	1	Earth terminal	P	2	CT (with 10m cable)
H	1	Communication connector	Q	1	RJ45
I	1	Quick installation guide	R	1	Unlocking tool (only for Australia)

Note:

1. For 7-8kW, there are 6 PV connectors and 6 PV pin contacts (3*positive, 3*negative);

For 9-10.5kW, there are 8 PV connectors and 8 PV pin contacts (4*positive, 4*negative).

2. For Australian market, the package will include two CTs and there would be no battery connectors and battery pin contacts.

5.3 Mounting

• Installation Precaution

Make sure the installation site meets the following conditions:

- Not in direct sunlight.
- Not in areas where highly flammable materials are stored.
- Not in potential explosive areas.
- Not in the cool air directly.
- Not near the television antenna or antenna cable.
- Not higher than altitude of about 2000m above sea level.
- Not in environment of precipitation or humidity (> 95%).
- Under good ventilation condition.
- The ambient temperature in the range of -25°C to +60°C.
- The slope of the wall should be within +5*.
- The wall hanging the inverter should meet conditions below:

A. Solid brick/concrete, or strength equivalent mounting surface;

B. Inverter must be supported or strengthened if the wall's strength isn't enough (such as wooden wall, the wall covered by thick layer of decoration).

Please avoid direct sunlight, rain exposure, snow laying up during installation and operation.

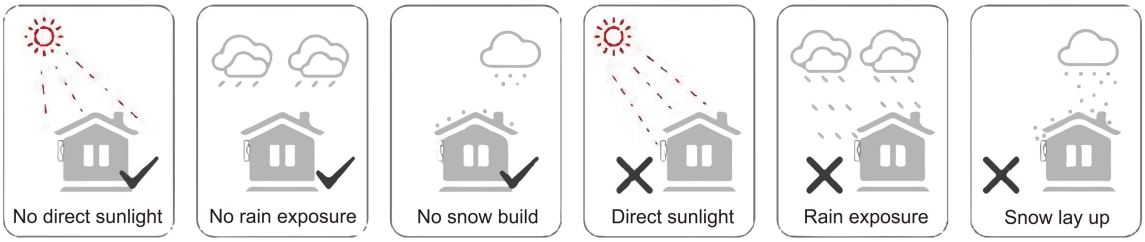

• Space Requirement

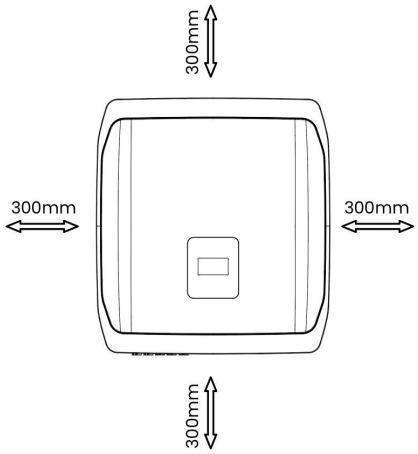

Position	Min Distance
Left	300mm
Right	300mm
Top	300mm
Bottom	300mm

• Mounting Steps

Tools required for installation:

- Manual wrench;
- Electric drill (drill bit set 8mm);
- Crimping pliers;
- Stripping pliers;
- Screwdriver.

1. Fix the bracket on the wall

- Choose the place you want to install the inverter. Place the bracket on the wall and mark the position of the 6 holes from bracket.

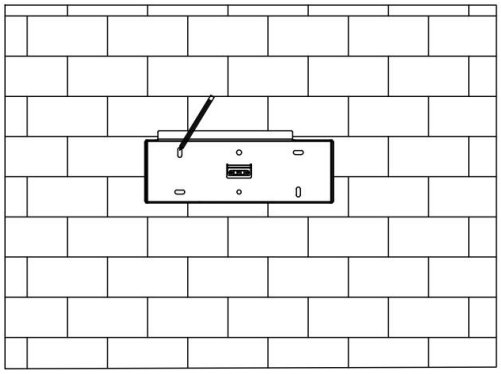

- Drill holes with electric drill, make sure the holes are at least 50mm deep and 8mm wide, and then tighten the expansion tubes.

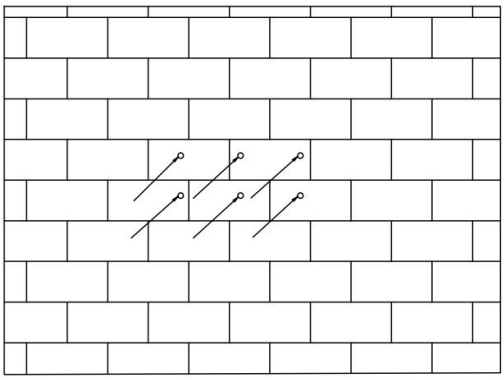

- Insert the expansion tubes into the holes and tighten them. Install the bracket with the expansion screws.

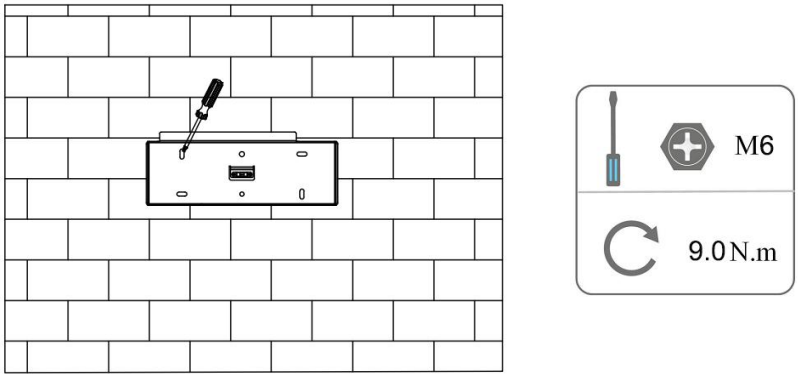

2. Match the inverter with wall bracket

- Mount the inverter to the bracket. Secure the inverter with the M5 screw and washer.

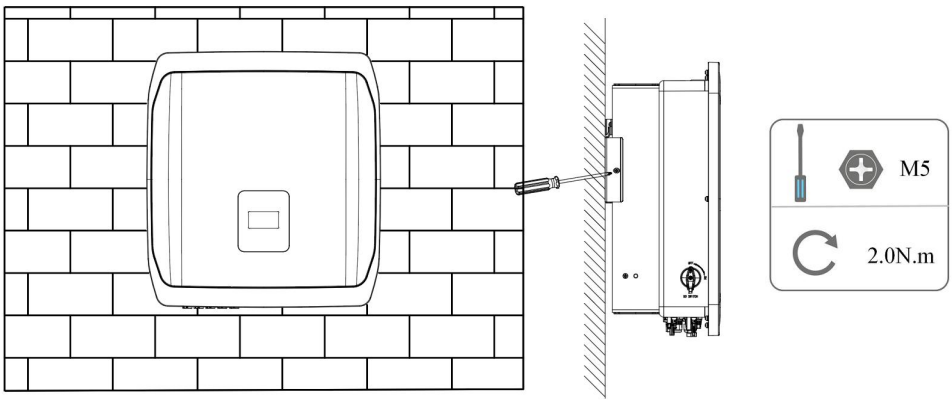

6. Electrical Connection

6.1 PV Connection

Step 1: PV String Connection

Inverter vision one 1.1 series inverters can be connected with 4-strings of PV modules. Please select suitable PV modules with high reliability and quality. Open circuit voltage of module array connected should be less than 600V, and operating voltage should be within the MPPT voltage range.

	Note! Please choose a suitable external DC switch if the inverter does not have a built-in DC switch.
	Warning! PV module voltage is very high and within a dangerous voltage range, please comply with the electric safety rules when connecting.
	Warning! Please do not make PV positive or negative to ground!
	Note! PV modules: Please ensure they are the same type, have the same output and specifications, are aligned identically, and are tilted to the same angle. In order to save cable and reduce DC loss, we recommend installing the inverter as near to the PV modules as possible.

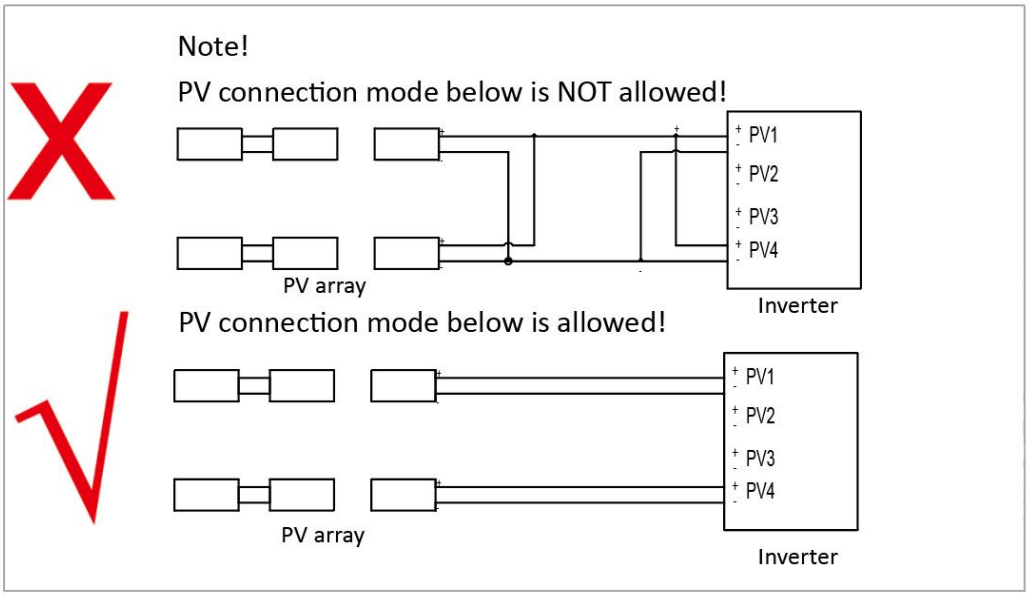

Step 2: PV Wiring

• Turn off the DC switch.

• Choose 2.5mm^2 wire to connect the PV module.

• Trim 6mm of insulation from the wire end.

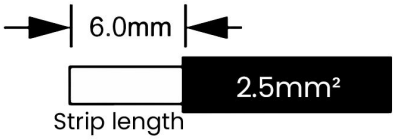

• Separate the DC connector (PV) as below.

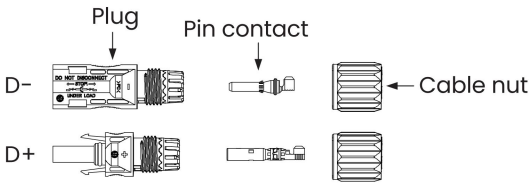

• Insert striped cable into pin contact and ensure all conductor strands are captured in the pin contact.

• Crimp pin contact with crimping pliers. Put the pin contact with striped cable into the corresponding crimping pliers and crimp the contact.

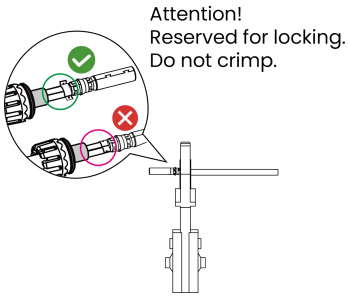

• Insert pin contact through the cable nut to assemble into back of the male or female plug. When you feel or hear a “click” the pin contact assembly is seated correctly.

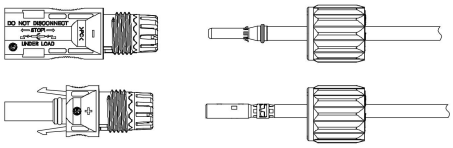

• When disconnecting the DC connector, please use the unlocking tool in the package.

- Align it with the buckle slot and press downward.
- Then pull the terminal outward.

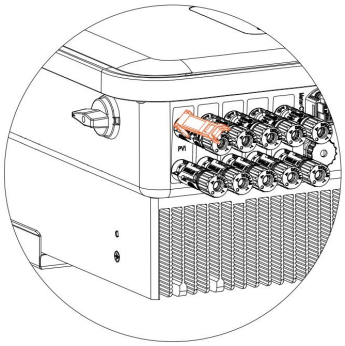

⚠DANGER

Make sure that the power cable connected to the inverter is connected vertically and that the vertical length is greater than 30 cm. If the cable is bent close to the terminals, it may cause poor line contact and result in burnt terminals.

6.2 Battery Connection

• Turn off the DC switch.

• Prepare BAT wire.

We recommend to use the original Bat-Inverter power cable and communication cable from Battery's accessory bag. If require a longer cable, please contact our sales representative to purchase.

• Connect the power line and communication line between the BMS and the inverter.

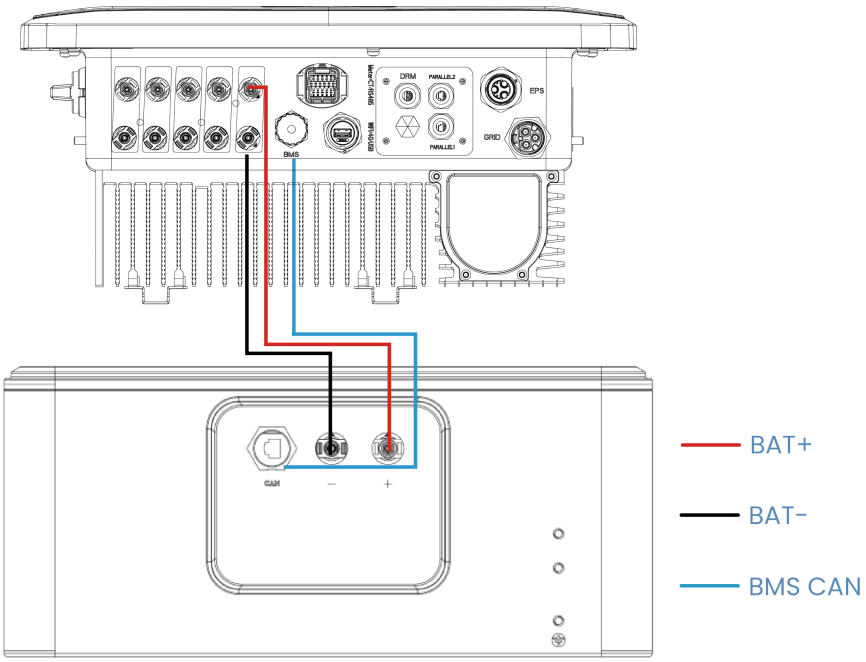

6.3 AC Connection

Step 1: AC String Connection

Inverter vision one 1.1 series inverters are designed for single-phase grid. Per voltage range is 220/230/240V; frequency is 50/60Hz. Other technical requests should comply with the requirement of the local public grid.

Cable dimensions

Table1: With EPS Function (Internal)

	Power (kW)	7.0~10.5	7.0~10.5 (AU)
Grid	Cable	16mm^2	10/16mm^2
	Micro-Breaker	80A	63A
EPS	Cable	10mm^2	10mm^2
	Micro-Breaker	50A	50A

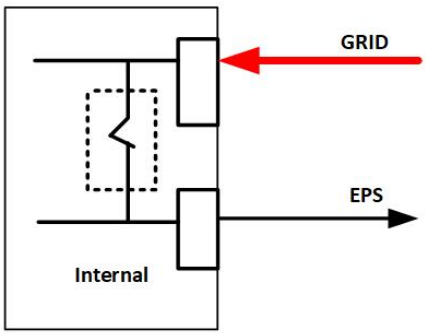

The Bypass Relay is connected in the On-Grid Connection state, and disconnected in the Off-Grid Connection state.

Note: See Table1 for Cable dimensions.

Table2: Without EPS Function (External)

	Power (kW)	7.0~8.0	9.0~10.5
Grid	Cable	6mm^2	10mm^2
	Micro-Breaker	50A	

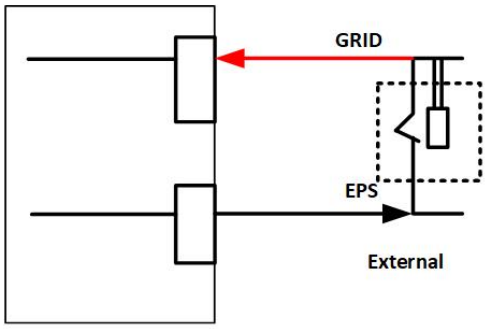

Select the "Normally open" relays or ATS.

The Bypass Relay is connected in the On-Grid Connection state, and disconnected in the Off-Grid Connection state.

Note: See Table2 for Cable dimensions.

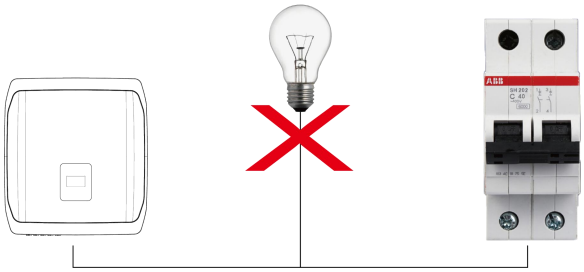

WARNING!

A micro-breaker for max output over-current protection device shall be installed between inverter and grid, and the current of the protection device is referred to the table above, any load SHOULD NOT be connected with the inverter directly.

Step 2: AC Wiring

• Check the grid voltage and compare with the permitted voltage range (refer to technical data).

• Disconnect the circuit-breaker from all the phases and secure against re-connection.

• Trim the wires:

- Trim all the wires to 52.5mm and the PE wire to 55mm.
- Use the crimping pliers to trim 12mm of insulation from all wire ends as below.

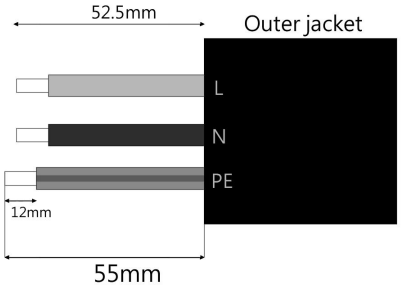

L: Brown/Red Wire

N: Blue/Black Wire

PE: Yellow & Green Wire

Note: Please refer to local cable type and color for actual installation.

A. GRID Wiring

• Separate the ON-GRID plug into three parts as below.

- Hold middle part of the female insert, rotate the back shell to loosen it, detach it from female inset.
- Remove the cable nut (with rubber insert) from the back shell.

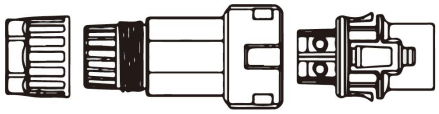

• Slide the cable nut and then the back shell onto the cable.Install the cable into the plug terminal and lock the screw, torque 3.0±0.3 N.m.

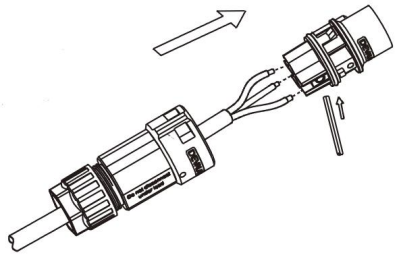

• Push the threaded sleeve into the socket, tighten up the cap on the terminal.

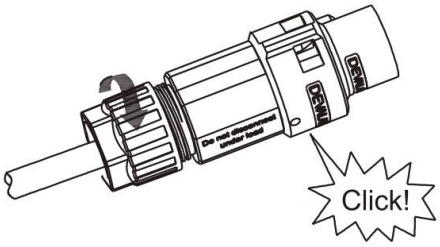

• Push the threaded sleeve to connection terminal until both are locked tightly on the energy station.

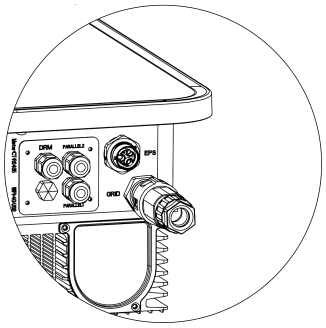

• Remove the ON-GRID connector: Press the bayonet out of the slot with a small screwdriver or the unlock tool and pull it out, or unscrew the threaded sleeve, then pull it out.

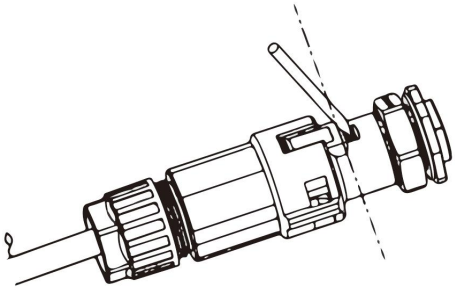

B. EPS Wiring

• Set the parts on the cable one by one

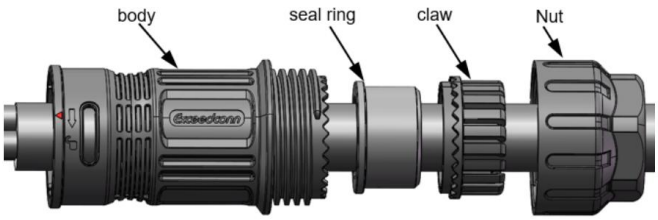

• Wire crimping cord end terminal can be inserted into the housing quickly according to the sign, torque 1.0±0.1N·m.

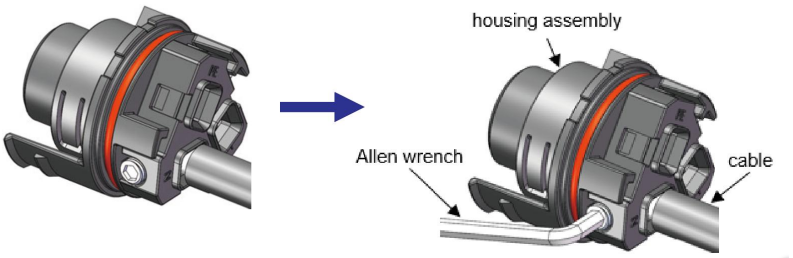

• The housing is inserted into the socket.

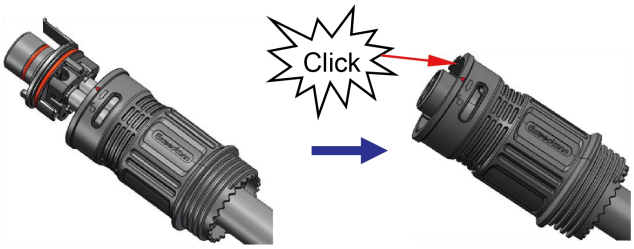

• Insert Seal and Clamp Finger into socket ,then tighten the nut, torque 5±1N·m.

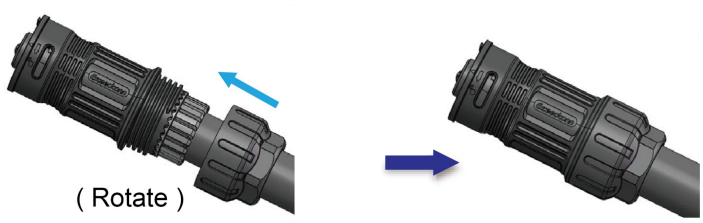

• Push the threaded sleeve to connection terminal until both are locked tightly on the inverter.

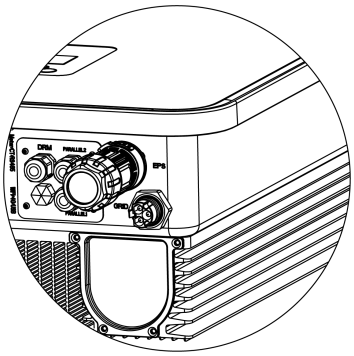

• Remove the EPS connector: press the connector unlock with a small screwdriver or the unlock tool and pull it out.

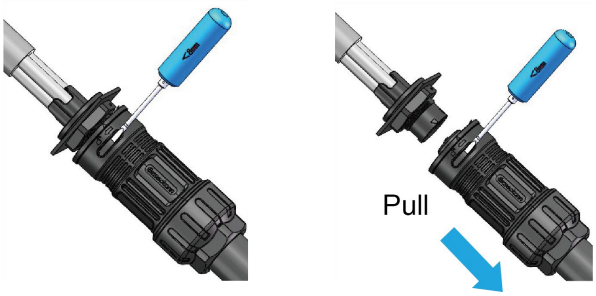

6.4 Earth Connection

Trim 6mm of insulation from the wire end.

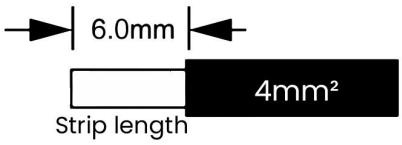

• Insert striped cable into earth terminal and ensure all conductor strands are captured in the earth terminal.

• Crimp earth terminal with crimping pliers. Put the earth terminal with striped cable into the corresponding crimping pliers and crimp the contact.

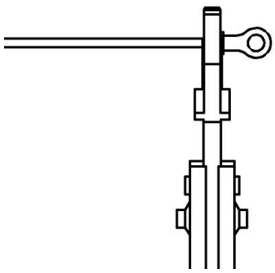

Use the crimping pliers to press the ground cable into the ground terminal, screw the ground screw with screwdriver as shown below:

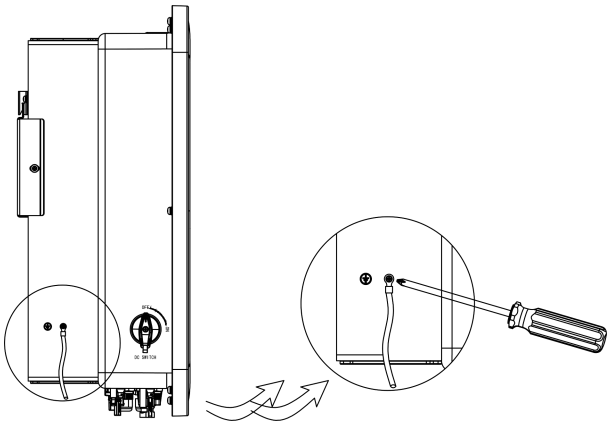

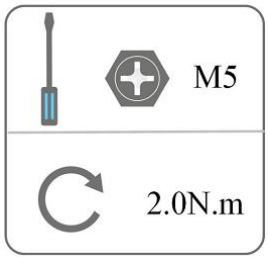

6.5 Electrical Connection

A. Communication Device Installation (Optional)

Inverter vision one 1.1 series inverters are available with multiple communication options such as WiFi, LAN, 4G, RS485 and Meter with an external device.
Operating information like output voltage, current, frequency, fault information, etc., can be monitored locally or remotely via these interfaces.

• WiFi/LAN/4G (Optional)

The inverter has an interface for WiFi/LAN/4G devices that allow this device to collect information from inverter; including inverter working status, performance etc., and update that information to monitoring platform (the WiFi/LAN/4G device is available to purchase from your local supplier).

Connection steps:

1. Plug the WiFi/LAN/4G device into “WiFi/LAN/4G” port at the bottom of the inverter.
2. For WiFi device: Connect the WiFi with the local router, and complete the WiFi configuration (please refer to the WiFi product manual for more details).
3. Set-up the site account on the monitoring platform (please refer to the monitoring user manual for more details).

• Meter/CT/RS485

The inverter has integrated export limitation functionality. To use this function, a power meter or a CT must be installed. The PIN definitions of Meter/CT/485 interface are as below.

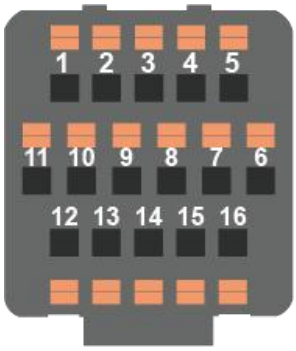

PIN	1	2	3	4	5	6	7	8
Definition	Meter 485A	Meter 485B	EMS 485B	EMS 485A	CT2+	CT2-	CT1-	CT1+

PIN	9	10	11	12	13	14	15	16
Definition	/	K1	K2	K3	K4	/	DI	COM

- CT1: For Inverter vision one 1.1, CT2: Grid tied inverter (if have).
- Compatible Meter type: DDSU666 (CHINT), SDM230 (EASTRON).
- CT
- K1/K2, K3/K4 are dry contacts or external heat pump control signals.
- DI/COM is an external input signal.

Note:

1. Please contact the distributors to purchase meter and CT. The part number is listed below:

Meter: 30-803-00027-00 (230V, 80A), 30-803-00030-00 (3×230/400V, 80A)

CT: 30-804-00003-00, 30-804-00004-00, 30-804-00025-00

2. The CT and meter both support a maximum distance of 100 meters.

This inverter has an integrated export management function. To enable this function, a power meter or CT must be installed. The CT should be clamped on the main live line of the grid side. The arrow on the CT should be pointing towards the grid. The white cable connects to CT+, and the black cable connects to CT-.

Meter/CT setting:

Short press the touch key to switch display or make the number+1. Long press the touch key to confirm your setting.

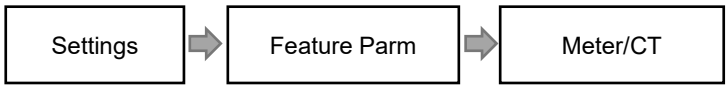

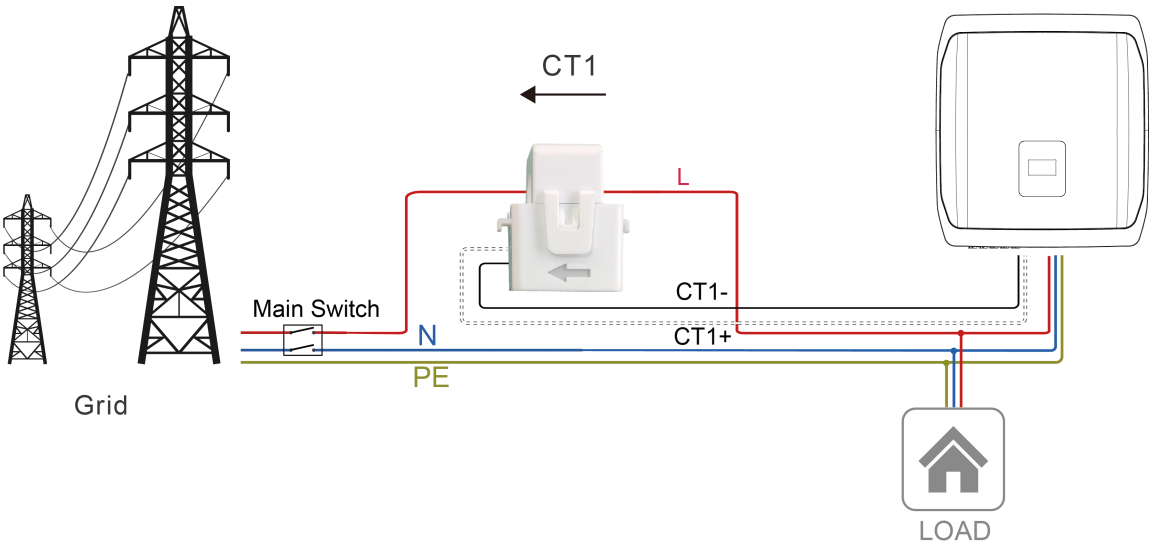

If there is another generator in the home, CT2 can be used to record the power generated by the generator and transmit the data to the website for monitoring.

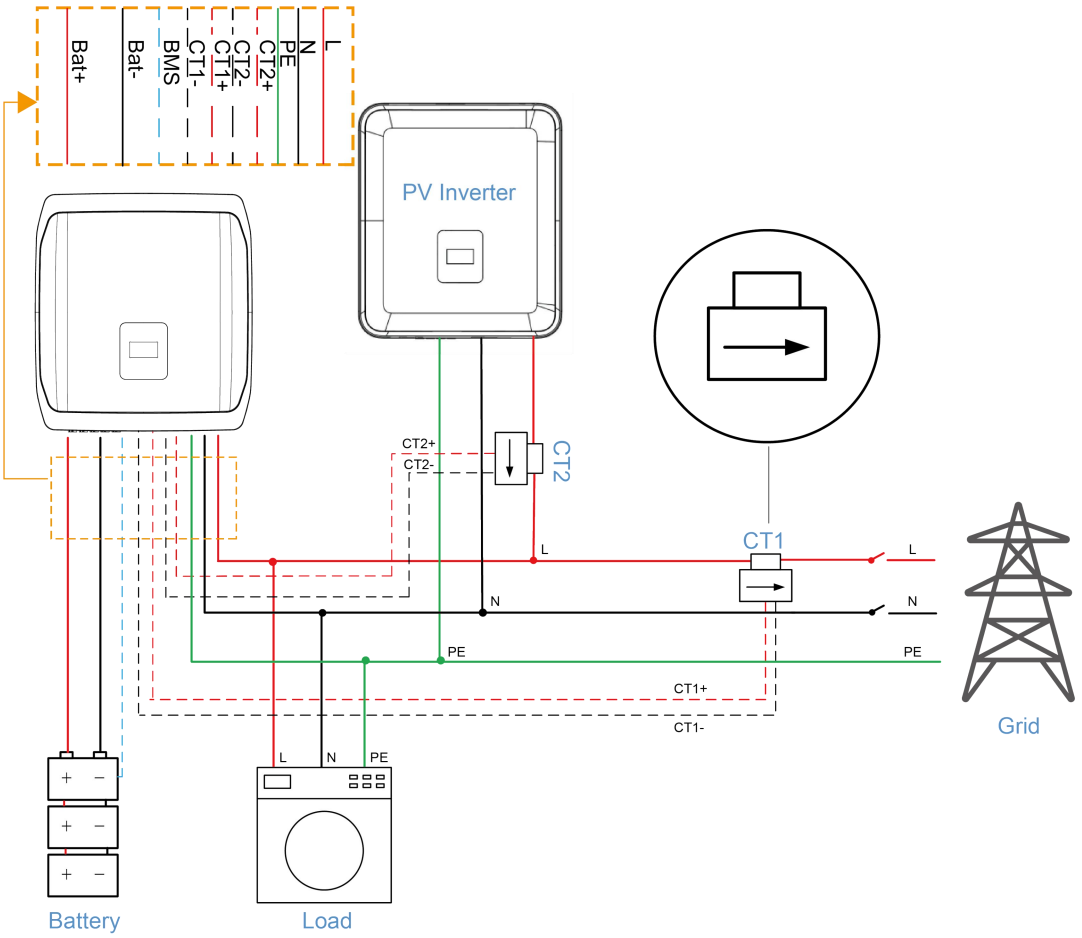

	Note! For a precise reading and control of power, a meter can be used instead of a CT. If the CT is fitted in the wrong orientation, anti-backflow function will fail.

• **RS485**

RS485 is a standard communication interface which can transmit the real time data from inverter to PC or other monitoring devices.

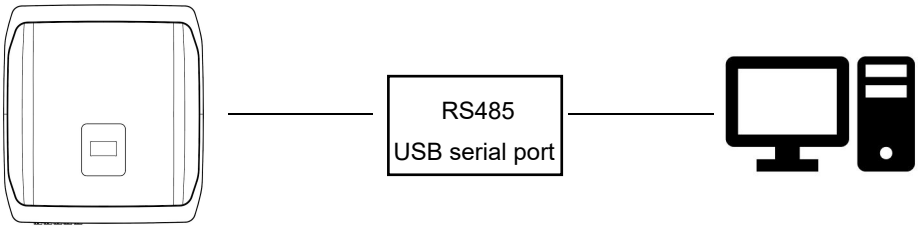

• **Meter (optional)**

The inverter has integrated export limitation functionality. To use this function, a power meter or a CT must be installed. For Meter installation, please install it on the grid side.

Export limitation setting:

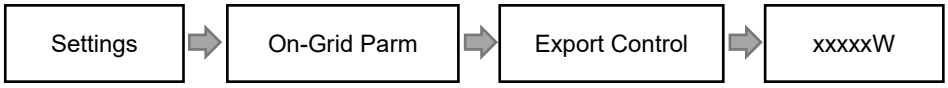

The electricity meter is connected as follows:

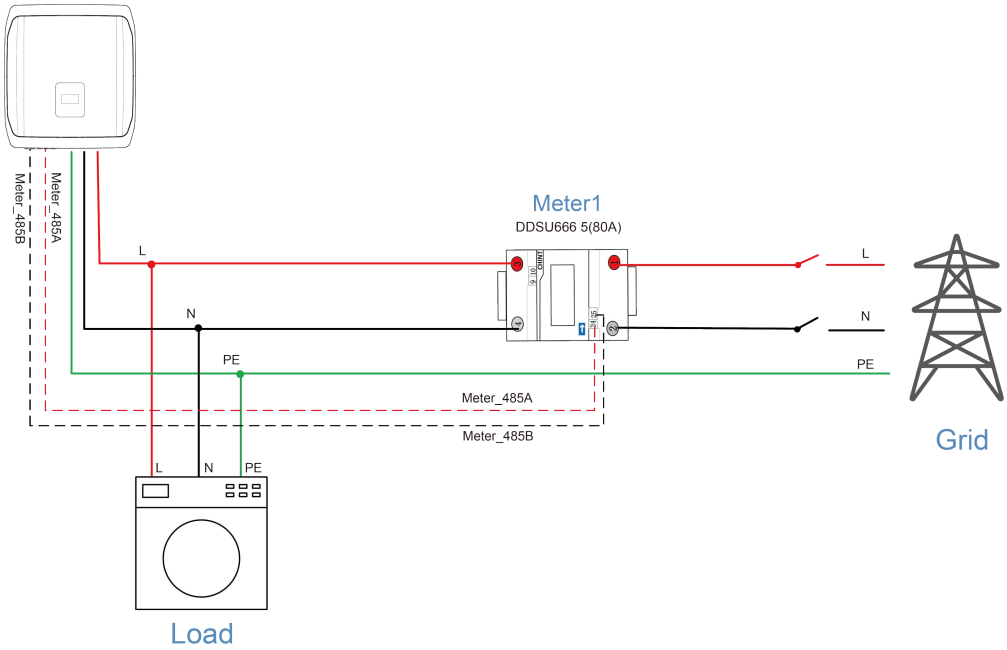

Wiring diagram for solution Meter1+CT2:

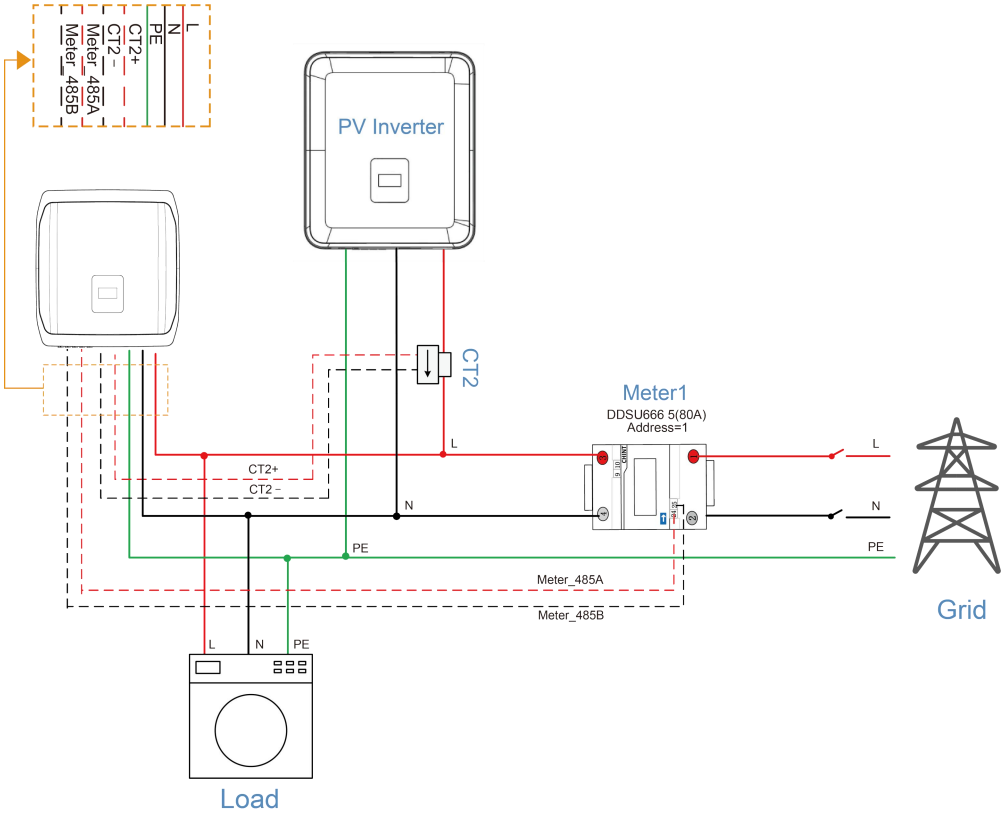

Caution: Please do the wiring strictly according to the diagram below, do not exchange Meter1 and Meter2 location in following dual-meter wiring solution, or may lead to unpredictable malfunction in data-recording. You can discern Meter1 or Meter2 from the package of the Meter. Default Modbus address for Meter1 is 1, default Modbus address for Meter2 is 2.

Wiring diagram for solution Meter+ 6CTs:

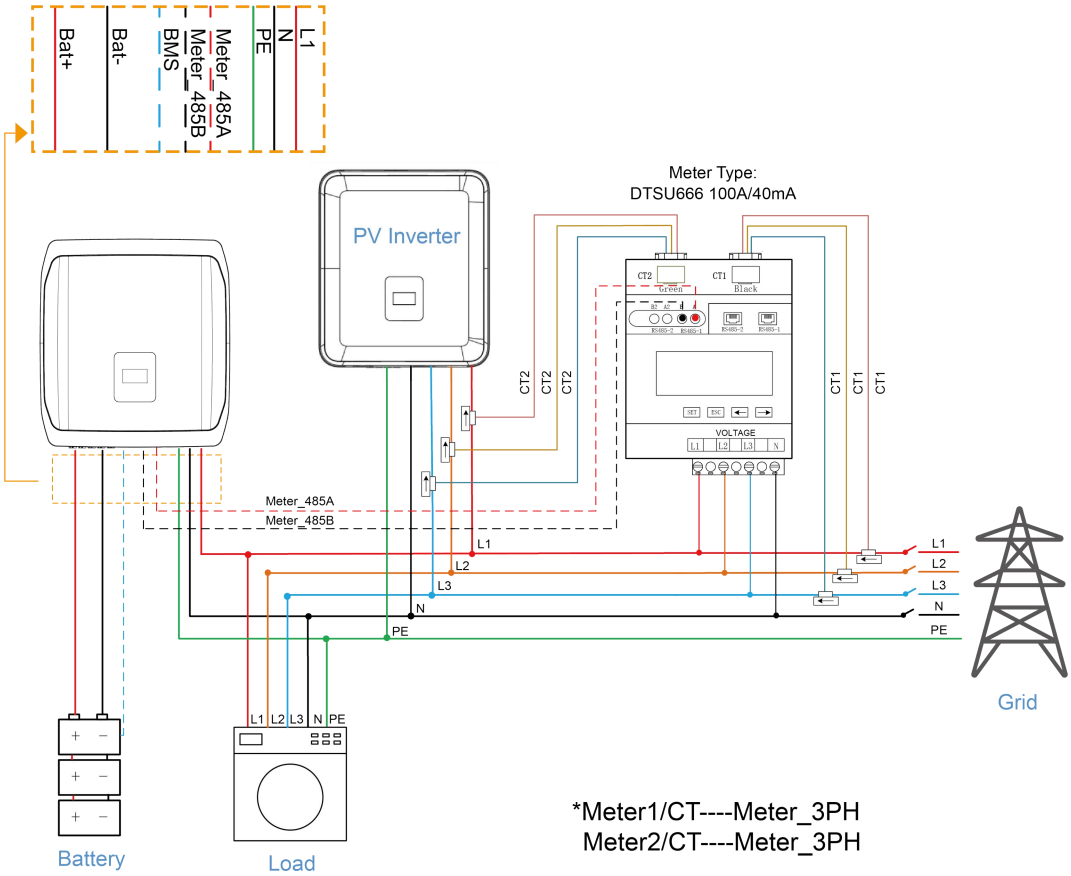

Wiring diagram for solution Meter1+Meter2 (single phase):

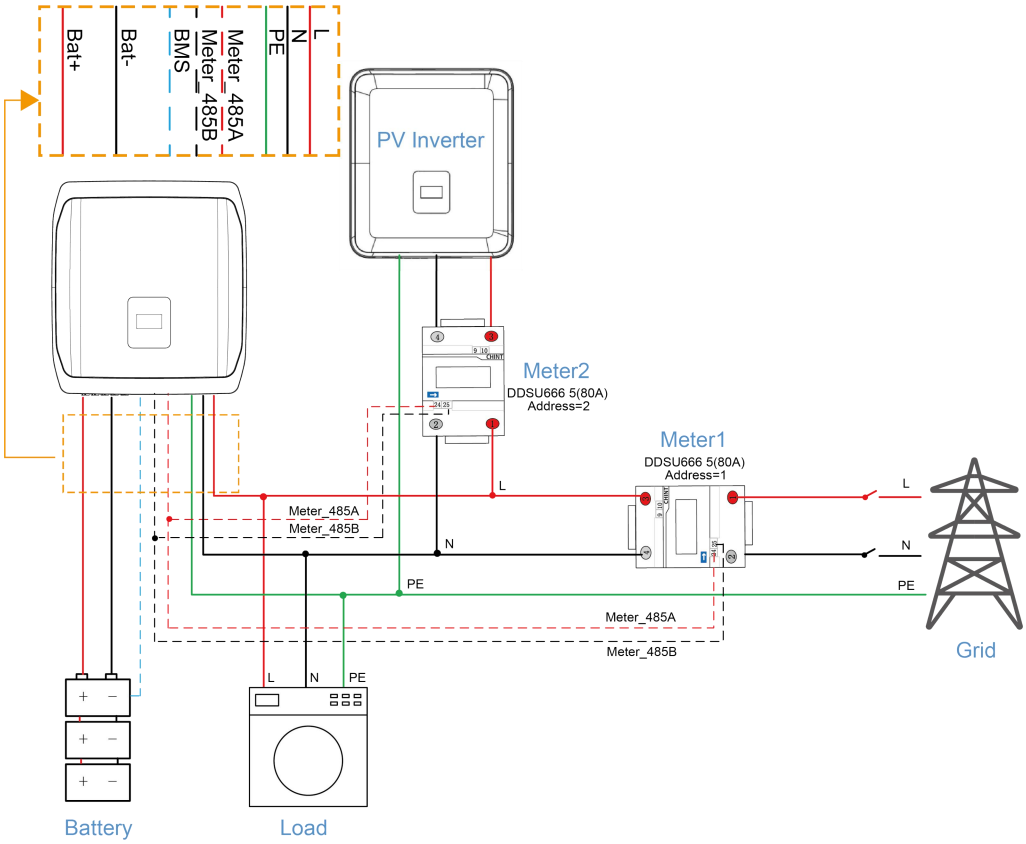

Wiring diagram for solution Meter1+Meter2 (three phase):

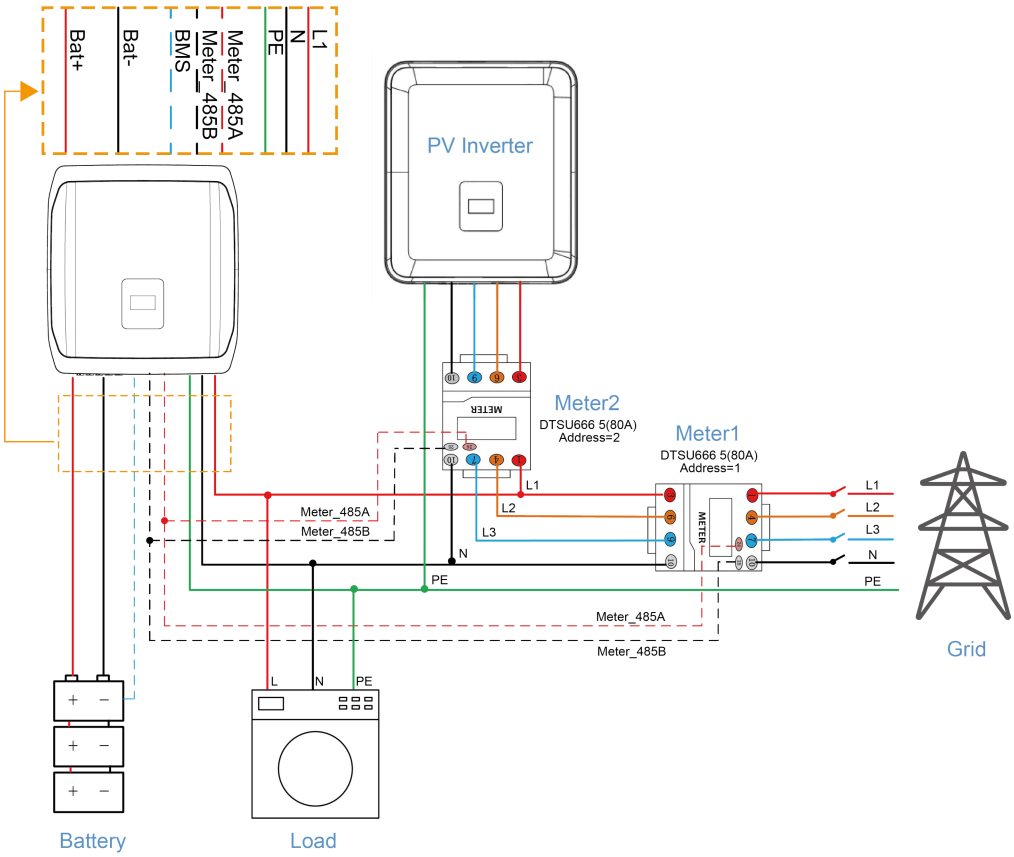

• **BMS**

Communication interface between inverter and battery is RS485 or CAN with a Rj45 connector.

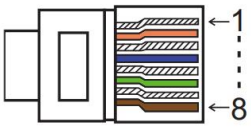

PIN	1	2	3	4	5	6	7	8
Definition	BMS-AWAKEN	GND	BMS-485B	BMS-CANL	BMS-CANH	BMS-CANH	BMS-CANL	BMS-485A

Step 1: Insert the network cable into the wire-locking nut, sealing plug and main body in turn. The sealing plug is stuck into the network cable through the gap on the sealing side.

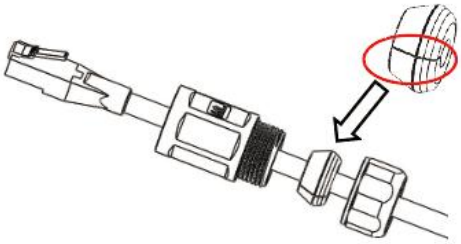

Stuck into the network cable through the gap on the sealing side

Step 2: Insert the network cable plug into the matched RJ45 panel mount connector.

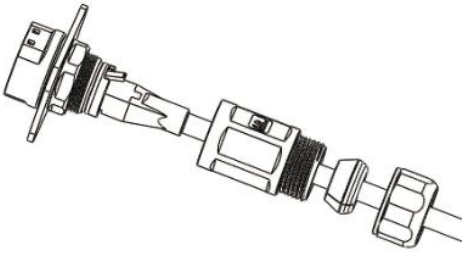

Step 3: Tighten the connector mainbody by an open-ended wrench into the RJ45 panel mount connector with a torque 1.2±0.2 N·m.

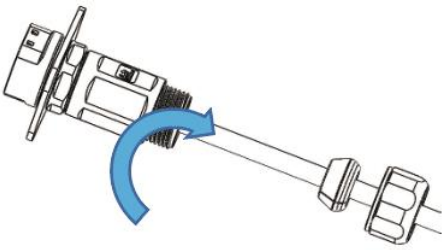

Step 4: Insert the sealing plug into the main body of RJ45 cable end connector.

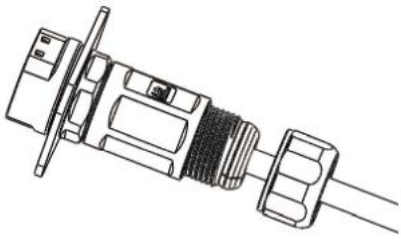

Step 5: Tighten the connector's nut by an open-ended wrench with a torque 1.2±0.2 N·m.

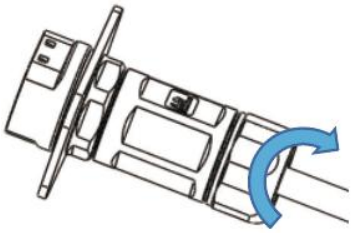

• **DRM**

DRM0 setting

Settings → Feature Parm → DRM0 → Enable/Disable

DRM is provided to support several demand response modes by emitting control signals as below.

Mode	Requirement
DRM0	Operate the disconnection device.
DRM1	Do not consume power.
DRM2	Do not consume at more than 50% of rated power.
DRM3	Do not consume at more than 75% of rated power and source reactive power if capable.
DRM4	Increase power consumption (subject to constraints from other active DRMs).
DRM5	Do not generate power.
DRM6	Do not generate at more than 50% of rated power.
DRM7	Do not generate at more than 75% of rated power and sink reactive power if capable.
DRM8	Increase power generation (subject to constraints from other active DRMs).

Note: Currently only supports DRM0 function, other functions are under development.

DRM PIN Definition

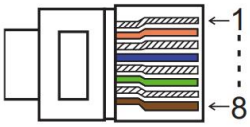

PIN	1	2	3	4	5	6	7	8
Definition	DRM1	DRM2	DRM3	DRM4	+3.3V	DRM0	GND	GND

Model	Socket asserted by shorting pins		Function
DRM0	5	6	Operate the disconnection device.

Connection steps:

Step 1: Screw the cable connector off from the inverter.

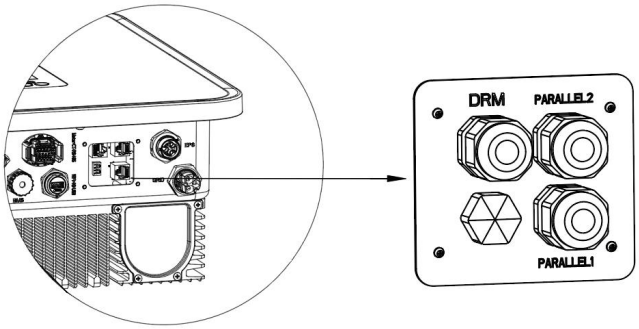

Step 2: Prepare a standard network cable and RJ45 plug, then insert the network cable through the cable connector.

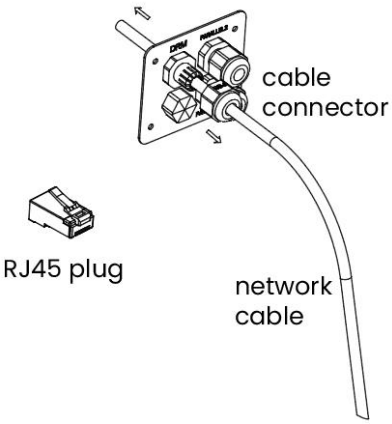

Step 3: Crimp the cable with the RJ45 plug using a crimping tool.

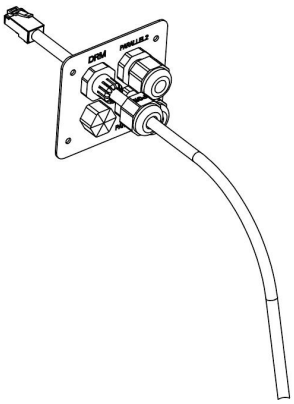

Step 4: Insert the cable connector into DRM port at the bottom of the inverter and screw it tightly.

Note:

- Isolation Fault

This inverter complies with IEC 62109-2 clause 13.9 for earth fault alarm monitoring. If an Earth Fault Alarm occurs, the fault code isolation fault will be displayed on the inverter screen and the RED LED indicator will light up.

System Diagram of DRM0 (only for Australia)

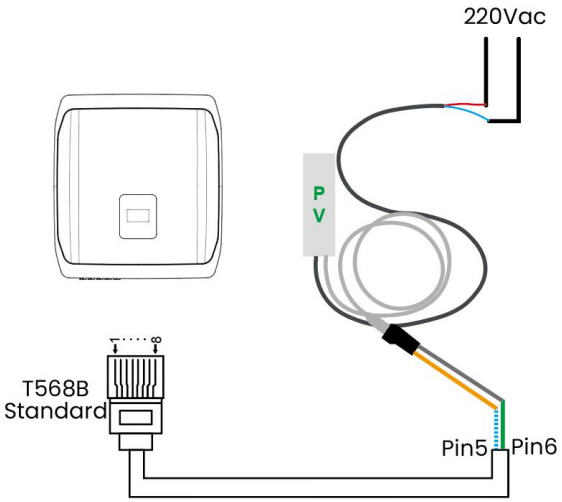

Connector & Adapter Pinouts

Color	PIN	Function
Yellow	5	RefGen
Grey	6	Common

RJ45 Connector

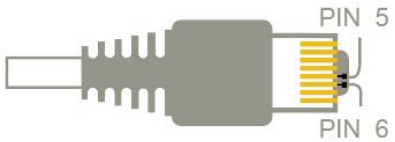

RJ45 Adapter

red coloured sheath

Note: Similar adapters with a black coloured sheath are fitted with four wires and will not work on PV inverters.

• On-Grid Parallel Connection/Off-Grid Parallel Connection

Inverter vision one 1.1 series inverters allow parallel connection of up to three units per system in both grid-connected and off-grid operation. In this system, Inverter vision one 1.1 series energy storage machines support the most parallel applications to achieve the purpose of capacity expansion. The following is an example of the wiring method of three parallel machines, using RJ45 network cable to connect the Parallel port of three machines hand in hand by setting the Parallel parameter.Number represents the number of parallel machines, for example, three machines in parallel can be written "3". Address represents the CAN address of each machine, any three non-repeating values between 1 and 249 can be set.Only one meter needs to be connected in this system and communicate with the "Master inverter", and all other slaver inverters communicate with "Master inverter" by CAN communication-parallel connection.

Note: If multiple parallel machines are far apart and the network cable between Parallel port is too long, you can put the terminal resistor in by dialing in the code and just set the first and last two devices to dial in.

Parallel 1/2 are the ports used in parallel. The system diagram is as follows:

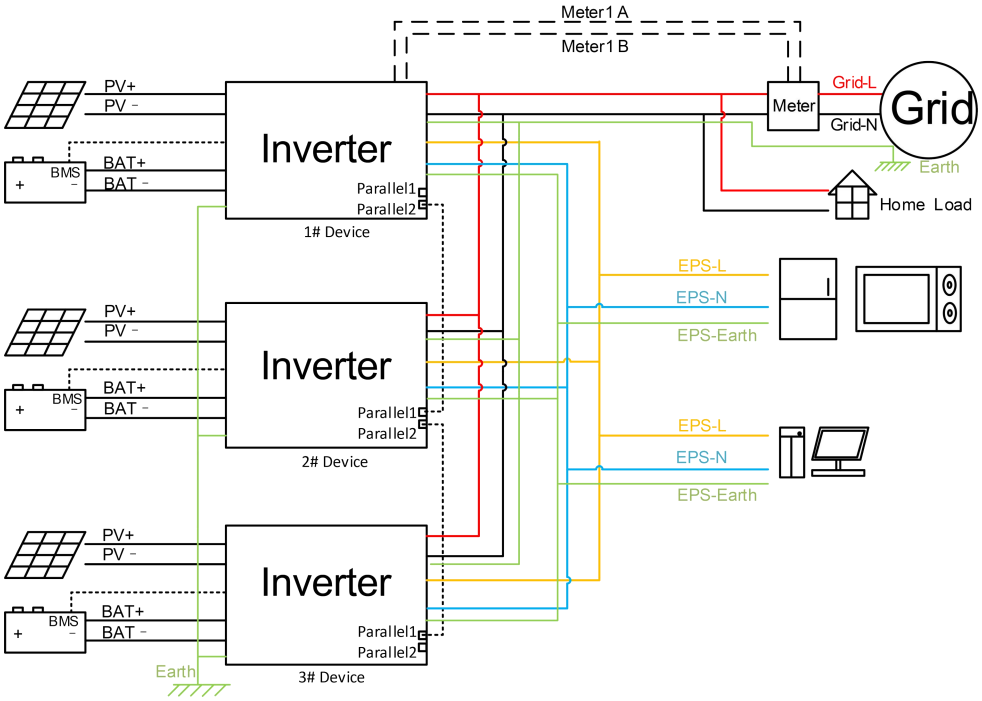

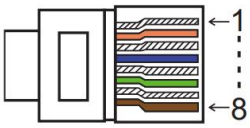

PIN	1	2	3	4	5	6	7	8
Parallel 1	E_STOP	GND_COM	/	Parallel_CANH	Parallel_CANL	/	Parallel_485B	Parallel_485A
Parallel 2	E_STOP	GND_COM	/	Parallel_CANH	Parallel_CANL	/	Parallel_485B	Parallel_485A

Note: Please confirm the software version, some software does not support the parallel function, you can contact our service department.

■ Wiring Operation and LCD Setting

Note: Please use the inverter that has the same firmware version for parallel connection to avoid compatible issue.

Step1: Connect all inverters' communication together by connecting network cables between CAN ports.

- Use standard CAT 7 network cables for CAN-CAN connection and CAT 5 cable for CAN-Meter connection.
- Insert one side of CAT 7 cable into the first inverter's CAN port and the other side into the next inverter's CAN port.
- Insert one side of CAT 5 cable into the Meter port of meter, and the other side into the CAN 1 port the first inverter or the CAN 2 port of the last inverter.

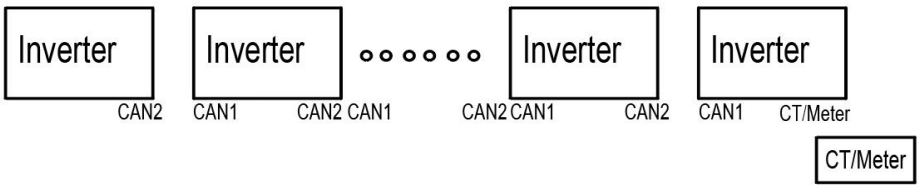

Step2: Set the DIP switch (No need to set all inverter's DIP switch).

- Parallel machines at both ends need to be dialed into the termination resistor.
- Push the white DIP switch to "ON" position (from down to up) by a suitable tweezers.

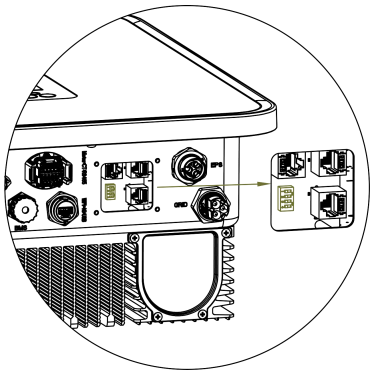

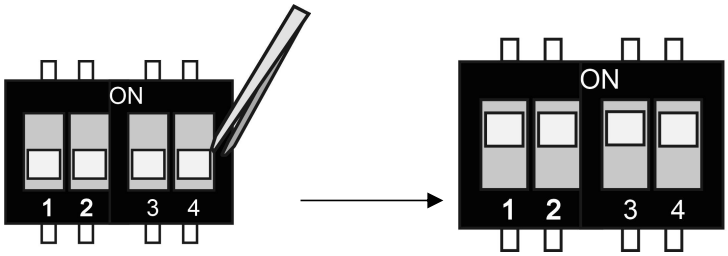

Step3: Find the inverter connected with the meter, then enter setting page of the inverter LCD display, then click parallel. Set Address first and then set Number. The range of Address is 1-249 and the range of Number is 2-8. address sets the id of the parallel machine, with a different value for each machine. Number sets the number of parallel machines, with the same value for each machine.

■ How to exit from parallel system

If one inverter wants to exit from this parallel system, please follow the steps below:

if address is set to 250, the parallel mode is exited and the stand-alone mode is entered.

6.6 EPS Connection (Non-parallel State)

A. EPS Wiring

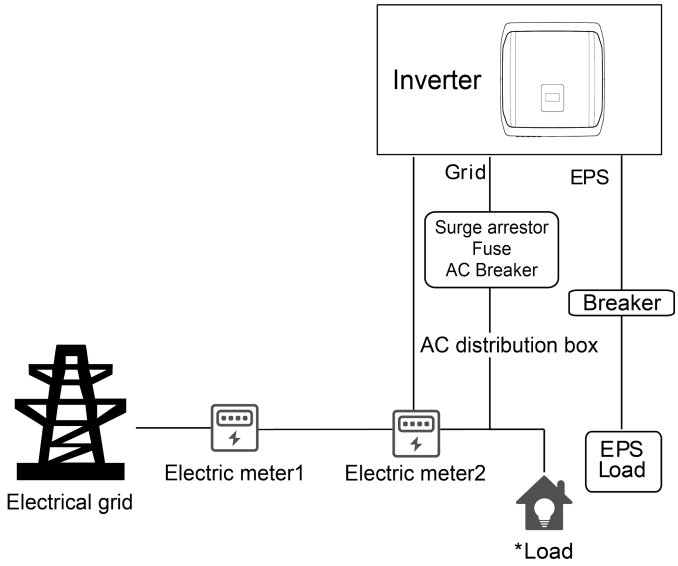

Note: When the grid power is off, ensure that the EPS load power is lower than the inverter's maximum output power.

B. Primary and secondary load switching wiring diagram

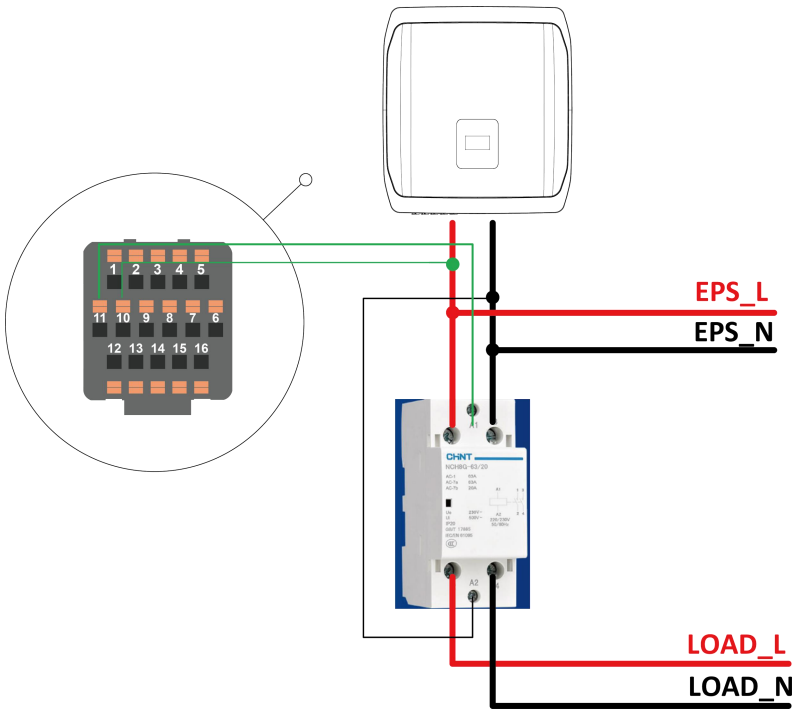

C. Common loads description

Under EPS mode, if need to connect the inductive load on EPS port, please ensure that the instantaneous power of the load at startup is lower than the maximum power of the EPS mode. Below table shows some conventional and reasonable loads for you reference. Please refer to your loads'

Type	Power		Common equipment	Example		
	Start	Rated		Equipment	Start	Rated
Resistive load	X 1	X 1	Incandescent lamp TV	100W Incandescent lamp	100VA (W)	100VA (W)
Capacitive load	X 2	X 1.5	Fluorescent lamp	40W Fluorescent lamp	80VA (W)	60VA (W)
Inductive load	X 3~5	X 2	Fan Fridge	150W Fridge	450-750VA (W)	300VA (W)

*Unipolar load is not supported.

6.7 System Connection Diagrams

Neutral line of alternative supply must be connected after the grid is off.

For countries such as China, Germany, the Czech Republic, Italy, etc., please follow the local wiring regulation!

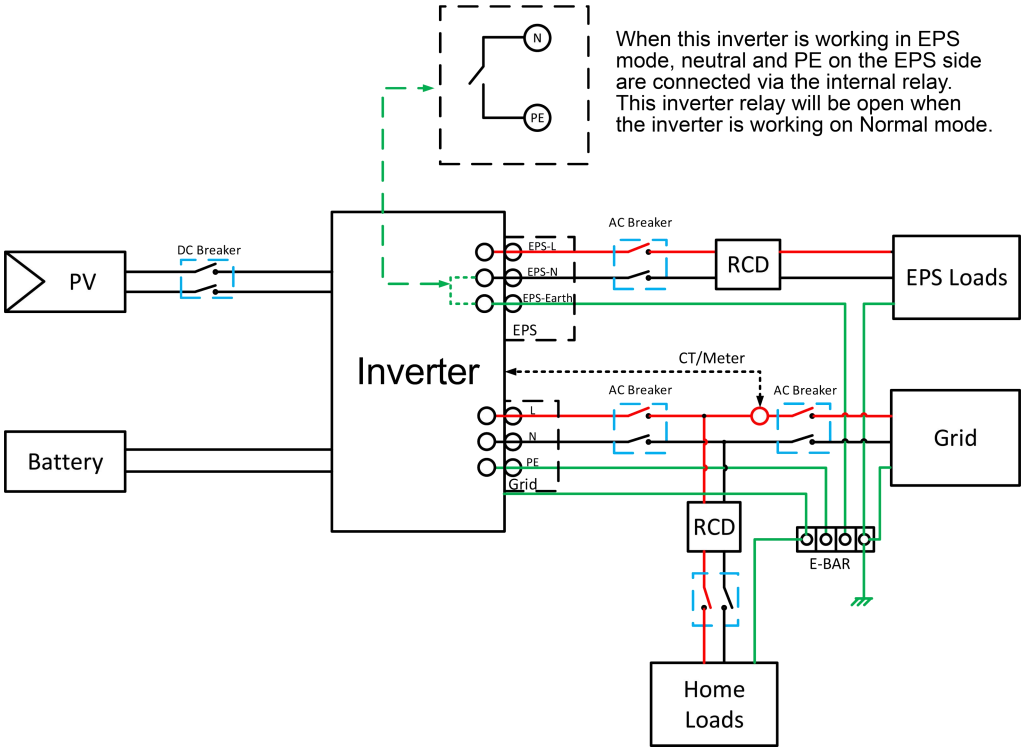

Neutral line of Grid and alternative supply must be connected together.

For countries such as Australia, New Zealand, South Africa, etc., please follow local wiring regulation!

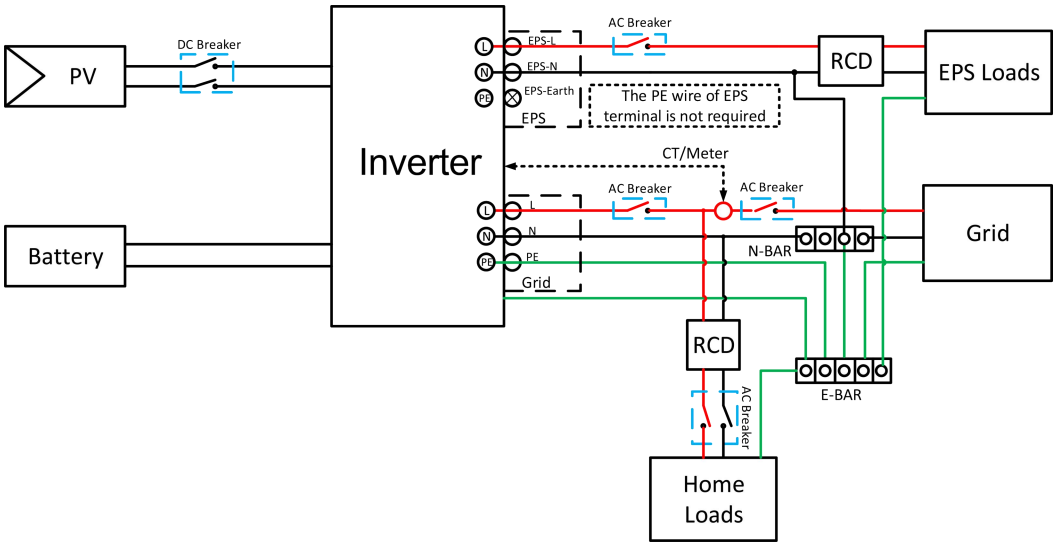

*Recommended RCD specification: 30mA RCD

7. Firmware Upgrading

User can upgrade inverter's firmware via a U-disk.

• Safety check

Please ensure the inverter is steadily powered on.

Inverter must keep the battery on through whole procedure of upgrading. Please prepare a PC and make sure the size of U-disk is under 32G, and the format is fat 16 or fat 32.

⚠	**Caution!** Please DO NOT apply USB3.0 U-disk on inverter USB port, the inverter USB port only support for USB2.0 U-disk.

• Upgrading steps:

Step 1: Please contact our service support to get the update files, and extract it into your U-disk as follow:

update/master/ [redacted]_Master_Vx.xx.bin

update/slave/ [redacted]_Slave_V.xx.bin

update/manager/ [redacted]_Manager_Vx.xx.bin

Note: vx.xx is version number.

Warning: Make sure the directory is in accordance with above form strictly! Do not modify the program file name, or it may cause the inverter not work anymore!

Step 2: Unscrew the waterproof lid and insert U-disk into the "USB" port at the bottom of the inverter.

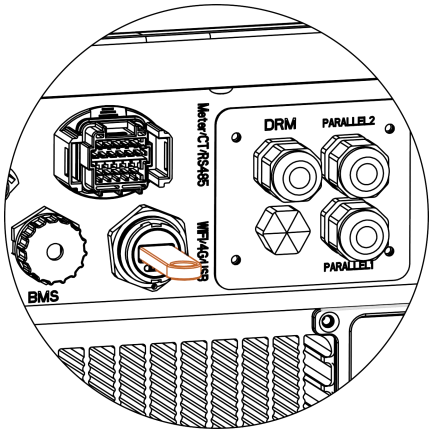

Step 3: The LCD will show the selection menu. Then press up and down to select the one that you want to upgrade and press "OK" to confirm to upgrade.

Step 4: After the upgrade is finished, pull out the U-disk. Screw the waterproof lid.

8. Operation

8.1 Control Panel

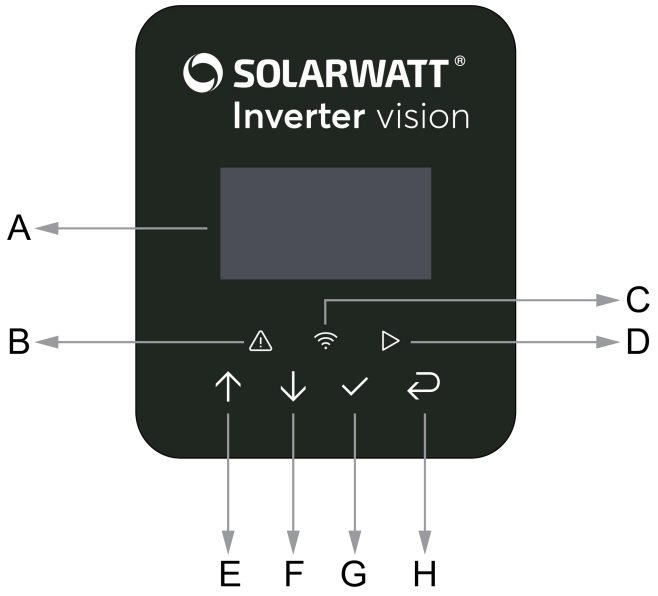

Object	Name	Function
A	LCD screen	Display the information of the inverter.
B	Indicator LED	Red: The inverter is in fault mode.
C		Blue: The inverter is normally connected to the battery.
D		Green: The inverter is in normal state.
E	Function button	Up button: Move cursor to upside or increase value.
F		Down button: Move cursor to downside or decrease value.
G		OK button: Confirm the selection.
H		Return button: Return the previous operation.

8.2 Function Tree

- Single machine operation mode

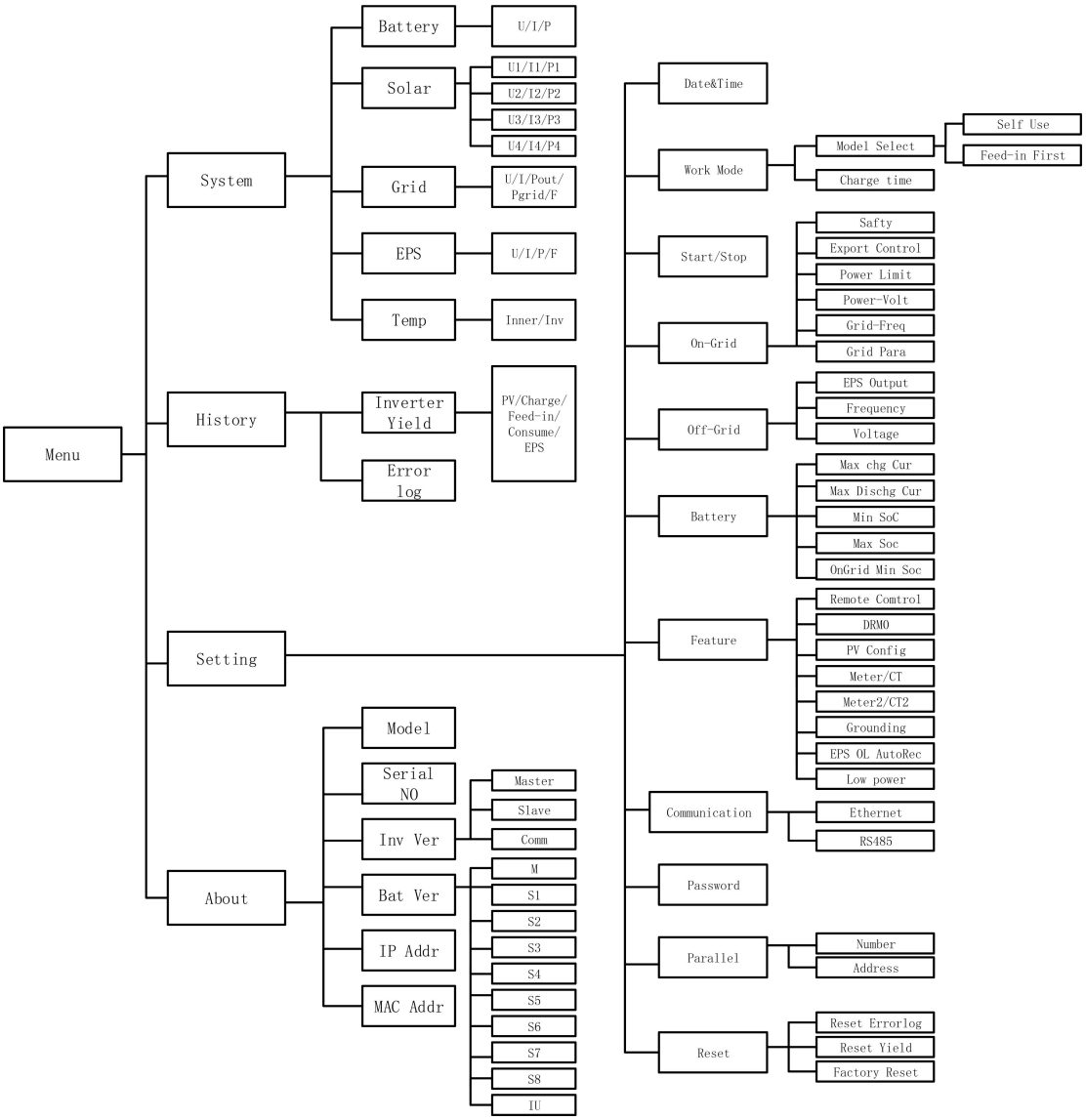

9. Maintenance

This section contains information and procedures for solving possible problems with the inverters and provides you with troubleshooting tips to identify and solve most problems that can occur.

9.1 Alarm List

Fault Code	Solution
Grid Lost Fault	Grid is lost. • System will reconnect if the utility is back to normal. • Or seek help from us, if not go back to normal state.
Grid Volt Fault	Grid voltage out of range. • System will reconnect if the utility is back to normal. • Or seek help from us, if not go back to normal state.
Grid Freq Fault	Grid frequency out of range. • System will reconnect if the utility is back to normal. • Or seek help from us, if not go back to normal state.
10min Volt Fault	The grid voltage is out of range for the last 10 Minutes. • System will reconnect if the utility is back to normal. • Or seek help from us, if not go back to normal state.
SW Inv Cur Fault	Output current high detected by software. • Disconnect PV, grid and battery, then reconnect. • Or seek help from us, if not go back to normal state.
DCI Fault	DC component is out of limit in output current. • Disconnect PV, grid and battery, then reconnect. • Or seek help from us, if not go back to normal state.
HW Inv Cur Fault	Output current high detected by hardware. • Disconnect PV, grid and battery, then reconnect. • Or seek help from us, if not go back to normal state.
SW Bus Vol Fault	Bus voltage out of range detected by software. • Disconnect PV, grid and battery, then reconnect. • Or seek help from us, if not go back to normal state.
Bat Volt Fault	Battery voltage fault. • Check if the battery input voltage is within the normal range. • Or seek help from us.

SW Bat Cur Fault	Battery current high detected by software. • Disconnect PV, grid and battery, then reconnect. • Or seek help from us, if not go back to normal state.
Iso Fault	The isolation is failed. • Please check if the insulation of electric wires is damaged. • Wait for a while to check if back to normal. • Or seek for help from us.
Res Cur Fault	The residual current is high. • Please check if the insulation of electric wires is damaged. • Wait for a while to check if back to normal. • Or seek for help from us.
Pv Volt Fault	PV voltage out of range. • Please check the output voltage of PV panels. • Or seek for help from us.
SW Pv Cur Fault	PV input current high detected by software. • Disconnect PV, grid and battery, then reconnect. • Or seek help from us, if not go back to normal state.
Temp Fault	The inverter temperature is high. • Please check if the environment temperature. • Wait for a while to check if back to normal. • Or seek for help from us.
Ground Fault	The ground connection is failed. • Check the voltage of neutral and PE. • Check AC wiring. • Disconnect PV, grid and battery, then reconnect. • Or seek help from us, if not go back to normal state.
Over Load Fault	Over load in on grid mode. • Please check if the load power exceeds the limit. • Or seek for help from us.
Eps Over Load	Over load in off grid mode. • Please check if the eps load power exceeds the limit. • Or seek for help from us.
Bat Power Low	The battery power is low. • Wait the battery to be recharged. • Or seek for help from us.
HW Bus Vol Fault	Bus voltage out of range detected by hardware. • Disconnect PV, grid and battery, then reconnect. • Or seek help from us, if not go back to normal state.

HW Pv Cur Fault	PV input current high detected by hardware. • Disconnect PV, grid and battery, then reconnect. • Or seek help from us, if not go back to normal state.
HW Bat Cur Fault	Battery current high detected by hardware. • Disconnect PV, grid and battery, then reconnect. • Or seek help from us, if not go back to normal state.
SCI Fault	The communication between master and manager is fail. • Disconnect PV, grid and battery, then reconnect. • Or seek help from us, if not go back to normal state.
MDSP SPI Fault	The communication between master and slave is fail. • Disconnect PV, grid and battery, then reconnect. • Or seek help from us, if not go back to normal state.
MDSP Smpl Fault	The master sample detection circuit is failed. • Disconnect PV, grid and battery, then reconnect. • Or seek help from us, if not go back to normal state.
Res Cur HW Fault	Residual current detection device is failed. • Disconnect PV, grid and battery, then reconnect. • Or seek help from us, if not go back to normal state.
Inv EEPROM Fault	The inverter eeprom is fault. • Disconnect PV, grid and battery, then reconnect. • Or seek help from us, if not go back to normal state.
PvCon Dir Fault	The PV connection is reversed. • Check if the positive pole and negative pole of PV are correctly connected. • Or seek help from us.
Bat Relay Open	The battery relay keeps open. • Disconnect PV, grid and battery, then reconnect. • Or seek help from us, if not go back to normal state.
Bat Relay Short Circuit	The battery relay keeps close. • Disconnect PV, grid and battery, then reconnect. • Or seek help from us, if not go back to normal state.
Bat Buck Fault	The battery buck circuit mosfet is fail. • Disconnect PV, grid and battery, then reconnect. • Or seek help from us, if not go back to normal state.
Bat Boost Fault	The battery boost circuit mosfet is fail. • Disconnect PV, grid and battery, then reconnect. • Or seek help from us, if not go back to normal state.

Eps Relay Fault	The eps relay is failed. • Disconnect PV, grid and battery, then reconnect. • Or seek help from us, if not go back to normal state.
BatCon Dir Fault	The battery connection is reversed. • Check if the positive pole and negative pole of battery are correctly connected. • Or seek help from us.
Main Relay Open	The grid relay keeps open. • Disconnect PV, grid and battery, then reconnect. • Or seek help from us, if not go back to normal state.
S1 Close Fault	The grid relay S1 keep close. • Disconnect PV, grid and battery, then reconnect. • Or seek help from us, if not go back to normal state.
S2 Close Fault	The grid relay S2 keep close. • Disconnect PV, grid and battery, then reconnect. • Or seek help from us, if not go back to normal state.
M1 Close Fault	The grid relay M1 keep close. • Disconnect PV, grid and battery, then reconnect. • Or seek help from us, if not go back to normal state.
M2 Close Fault	The grid relay M2 keep close. • Disconnect PV, grid and battery, then reconnect. • Or seek help from us, if not go back to normal state.
GridV Cons Fault	The grid voltage sample value between master and slave is not consistent. • Disconnect PV, grid and battery, then reconnect. • Or seek help from us, if not go back to normal state.
GridF Cons Fault	The grid frequency sample value between master and slave is not consistent. • Disconnect PV, grid and battery, then reconnect. • Or seek help from us, if not go back to normal state.
Dci Cons Fault	The dci sample value between master and slave is not consistent. • Disconnect PV, grid and battery, then reconnect. • Or seek help from us, if not go back to normal state.
Rc Cons Fault	The residual current sample value between master and slave is not consistent. • Disconnect PV, grid and battery, then reconnect. • Or seek help from us, if not go back to normal state.
RDSP SPI Fault	The communication between master and slave is fail. • Disconnect PV, grid and battery, then reconnect. • Or seek help from us, if not go back to normal state.
RDSP Smpl Fault	The slave sample detection circuit is failed. • Disconnect PV, grid and battery, then reconnect. • Or seek help from us, if not go back to normal state.

ARM EEPROM Fault	The manager eeprom is fault. • Disconnect PV, grid and battery, then reconnect. • Or seek help from us, if not go back to normal state.
Meter Lost Fault	The communication between meter and Inverter is interrupted. • Check if the communication cable between meter and Inverter is correctly and well connected.
BMS Lost	The communication between BMS and Inverter is interrupted. • Check if the communication cable between BMS and Inverter is correctly and well connected.
Bms Ext Fault	The communication between BMS and Inverter is interrupted. • Check if the communication cable between BMS and Inverter is correctly and well connected.
Bms Int Fault	DIP switch at the wrong position; The communication between battery packs is interrupted. • Move the DIP switch to the correct position; • Check if the communication cable between battery packs is correctly and well connected.
Bms Volt High	Battery over voltage. • Please contact our service department.
Bms Volt Low	Battery under voltage. • Please contact our service department.
Bms ChgCur High	Battery charge over current. • Please contact our service department.
Bms DchgCur High	Battery discharge over current. • Please contact our service department.
Bms Temp High	Battery over temperature. • Please contact our service department.
Bms Temp Low	Battery under temperature. • Please contact our service department.
BmsCellImbalance	The capacities of cells are different. • Please contact our service department.
Bms HW Protect	Battery hardware under protection. • Please contact our service department.
BmsCircuit Fault	Bms hardware circuit fault. • Please contact our service department.
Bms Insul Fault	Battery insulation fault. • Please contact our service department.

BmsVoltsSen Fault	Battery voltage sensor fault. • Please contact our service department.
BmsTempSen Fault	Battery temperature sensor fault. • Please contact our service department.
BmsCurSen Fault	Battery current sensor fault. • Please contact our service department.
Bms Relay Fault	Battery relay fault. • Please contact our service department.
Bms Type Unmatch	The capacity of battery packs is different. • Please contact our service department.
Bms Ver Unmatch	The software between slaves are different. • Please contact our service department.
Bms Mfg Unmatch	The cell manufacture is different. • Please contact our service department.
Bms SwHw Unmatch	The slave software and hardware are not match. • Please contact our service department.
Bms M&S Unmatch	The software between Master and Slave are not match. • Please contact our service department.
Bms ChgReq NoAck	No action for charging request. • Please contact our service department.

9.2 Troubleshooting and Routine Maintenance

•Troubleshooting

a. Please check the fault message on the System Control Panel or the fault code on the inverter information panel. If a message is displayed, record it before doing anything further.

b. Attempt the solution indicated in table above.

c. If your inverter information panel is not displaying a fault light, check the following to make sure that the current state of the installation allows for proper operation of the unit:

(1) Is the inverter located in a clean, dry, adequately ventilated place?

(2) Have the DC input breakers opened?

(3) Are the cables adequately sized?

(4) Are the input and output connections and wiring in good condition?

(5) Are the configurations settings correct for your particular installation?

(6) Are the display panel and the communications cable properly connected and undamaged?

Contact Customer Service for further assistance. Please be prepared to describe details of your system installation and provide the model and serial number of the unit.

• Safety check

A safety check should be performed at least every 12 months by a qualified technician who has adequate training, knowledge and practical experience to perform these tests. The data should be recorded in an equipment log. If the device is not functioning properly or fails any of the tests, the device has to be repaired. For safety check details, refer to section 2 of this manual.

• Maintenance checking list

During the process of using the inverter, the responsible person shall examine and maintain the machine regularly. The required actions are as follows.

- Check that if the cooling fins at the rear of the inverters are collecting dust/dirt, and the machine should be cleaned when necessary. This work should be conducted periodically.
- Check that if the indicators of the inverter are in normal state, check if the display of the inverter is normal. These checks should be performed at least every 6 months.
- Check if the input and output wires are damaged or aged. This check should be performed at least every 6 months.
- Get the inverter panels cleaned and their security checked at least every 6 months.

Note: Only qualified individuals may perform the following works.

10. Decommissioning

10.1 Dismantling the Inverter

- Disconnect the inverter from DC Input and AC output. Wait for 5 minutes for the inverter to fully de-energize.
- Disconnect communication and optional connection wiring. Remove the inverter from the bracket.
- Remove the bracket if necessary.

10.2 Packaging

If possible, please pack the inverter with the original packaging. If it is no longer available, you can also use an equivalent box that meets the following requirements.

- Suitable for loads more than 30 kg.
- Contains a handle.
- Can be fully closed.

10.3 Storage and Transportation

Store the inverter in dry place where ambient temperatures are always between -40°C ... + 70°C. Take care of the inverter during the storage and transportation; keep less than 4 cartons in one stack. When the inverter or other related components need to be disposed of, please ensure it is carried out according to local waste handling regulations. Please be sure to deliver any inverter that needs to be disposed from sites that are appropriate for the disposal in accordance with local regulations.

V1.0.1

10-500-10593-01